DONG LIM PIPING
FLANGES & FITTINGS

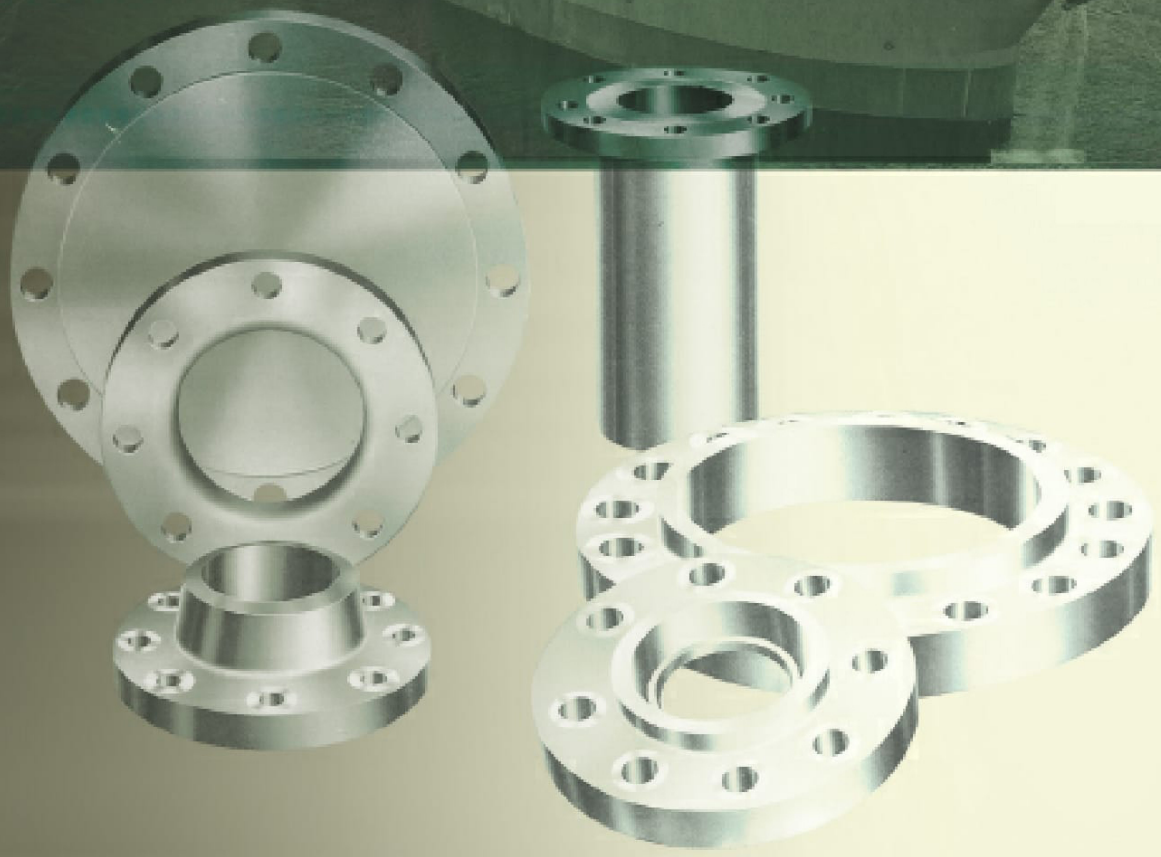

DONGLIM PIPING CO., LTD.
FORGED PRODUCTS & FITTINGS

Greetings.

Ever since started the Manufacturing of forging(flange,nozzle out-let, etc,. . .) in 1999 as the name of DONGLIM PIPING, we have been concentrating solely on this business field.
DONGLIM PIPING CO.,Ltd. extended the production capacity by a new extension factory on 2006.
So, we can satisfy the demands of various clients with sufficient stocks of ANSI B16.5 flanges.
We always make assurance doubly sure in material traceability by casing & attaching tag of every heat no.
We have own testing equipments to guarantee the reliability of products including high alloys and non-ferrous materials such like copper nickel Alloy, etc.. DONGLIM PIPING CO.,Ltd. dare to promise our unremitting exertions for the best quality and delivery, also we believe it is the way to be a best reliable partner with every Clients.

President Han, Chang Soo

弊社は1999年に創立致しまして，鍛造製品(フランジ，ノズル,out-letなど)の生産に力を注いで参りました．
2006年，弊社の工場新築を増設によるcopper welding flangeの供給をやらせて頂いており，ANSI B16.5規格flangeの充分な在庫を何時でもお客様へ手早く供給出来るシステムを整えております．
弊社の製品は全量を木箱に入れて保管しており,Heat番號別のTagを付けて素材の追跡管理に万全を期しております．
弊社は自社内の分析・試験室を稼動し，特殊鋼素材を含めて全製品の信頼度を確保しております．
これからもお客様のニーズにお答えすべく，弊社の全社員は一丸となって,たゆまぬ努力を續けて参ります．
どうぞ，今後とも一層のご支援，ご指導を御願い申し上げます．


communication
Flange Nozzle Out-Let
(Carbon,Sus,Alloy, Copper)

ISO CERTIFICATE

DAS CERTIFICATION

QUALITY MANAGEMENT SYSTEM

Certificate of Approval

This is to certify that the quality management system of

동림파이핑

ISO 9001:2000

Clause 7 Permissible Exclusion : 7.3 design and development

DAS CERTIFICATION LTD.

DAS CERTIFICATION

QUALITY MANAGEMENT SYSTEM

Certificate of Approval

This is to certify that the quality management system of

DONGLIM PIPING

Has been assessed and found to meet the requirements of :

ISO 9001:2000

Clause 7 Permissible Exclusion : 7.3 design and development

The certificate valid for the following scope of operation:

Manufacture and Service of Flange and Fittings

Certificate Number : DRQ-8149

Certificate Issue Date: 09 May 2009

Certificate Expiry Date: 08 May 2018

Initial Certification Date : 08 May 2007

DAS Certification Date : 08 May 2007

Re-Certification Date : 08 May 2013

Authorized :

DAS CERTIFICATION LTD.

• FLANGES

• COPPER-NICKEL FLANGES

FORGED FITTINGS

Manufacture Facility

TURNING

RADIAL DRILL

PLANO MILLER(CNC)

BAND SAWING

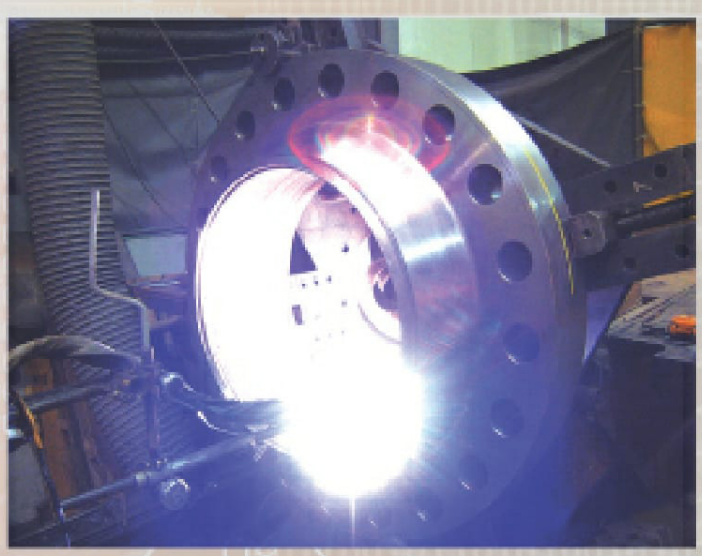

WELDING MACHINE

Inspection Facility

UNIVERSAL TESTER

MAGNETIC PARTICLE TESTER

ECHO HARDNESS TESTER

BRINELL HARDNESS TESTER

ROCKWELL HARDNESS TESTER

MAIN MANUFACTURING SEQUENCE

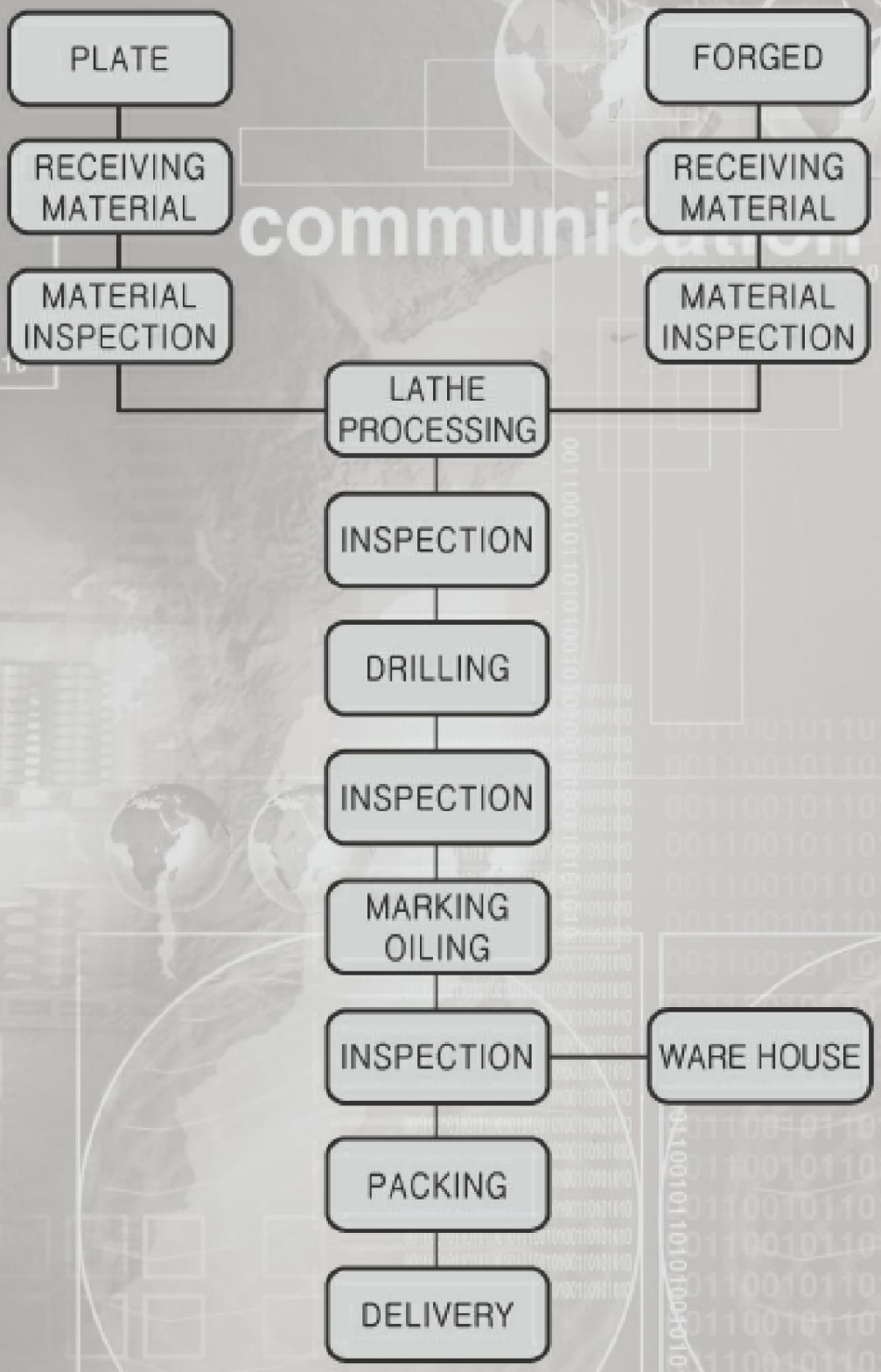

THE TYPE OF FLANGES

Welding Neck Flanges

The welding neck flange is normally referred to as the "high hub" flange. It is designed to transfer stresses to the pipe, thereby reducing high stress concentrations at the base of the flange. The welding neck flange is the best designed butt-welded flange of those currently available because of its inherent structural value.
It is expensive because of the design.

Threaded(Screwed) Flanges

The threaded flange is similar to the slip-on flange, but the bore is threaded. Its chief merit is that it can be assembled without welding, explaining its use in low pressure services at ordinary atmospheric temperatures, and in highly explosive areas where welding createa a hazard.

Slip-On Flanges

The Slip-on flange has a low hub because the pipe slips into the flange prior to welding. It is welded both inside and out to provide sufficient strength and prevent leakage. Slip-on flanges are all bored slightly larger than the outside diameter of the matching pipe. They are preferred over welding neck flanges by many users due to their lower initial cost, but final installation cost is probably not much less than that of the welding neck flange because of the additional welding involved.

Lap joint Flanges

The lap joint flange is practically identical to a slip-on flange except it has a radius at the intersection of the bore and flange face. This radius is necessary to have the flange accommodate a lap joint stub end. Normally, a lap joint flanges and a lap joint stub end are matched together in an assembly system.

Blind Flanges

The blind flanges is a flange without a bore. It is used to close off the ends of a piping system and/or pressuer vessel opening. It also permits easy access to the interior of a line or vessel once it has been sealed and must be reopened.

Socket Welding Flanges

The socket welding flange is similar to a slip-on flange except it has a bore and a counterbore dimension. The counterbore is slightly larger than the outside diameter of the matching pipe, allowing the pipe to be inserted into the flange similar to a slip-on flange. The diameter of the smaller bore is the same as the inside diameter of the matching pipe. A restriction is built into the bottom of the bore which sets as a shoulder for the pipe to rest on. This eliminates any restriction in flow when using a socket welding flange.

CONTENTS

DONG LIM'S Flanges

Standard Marking System

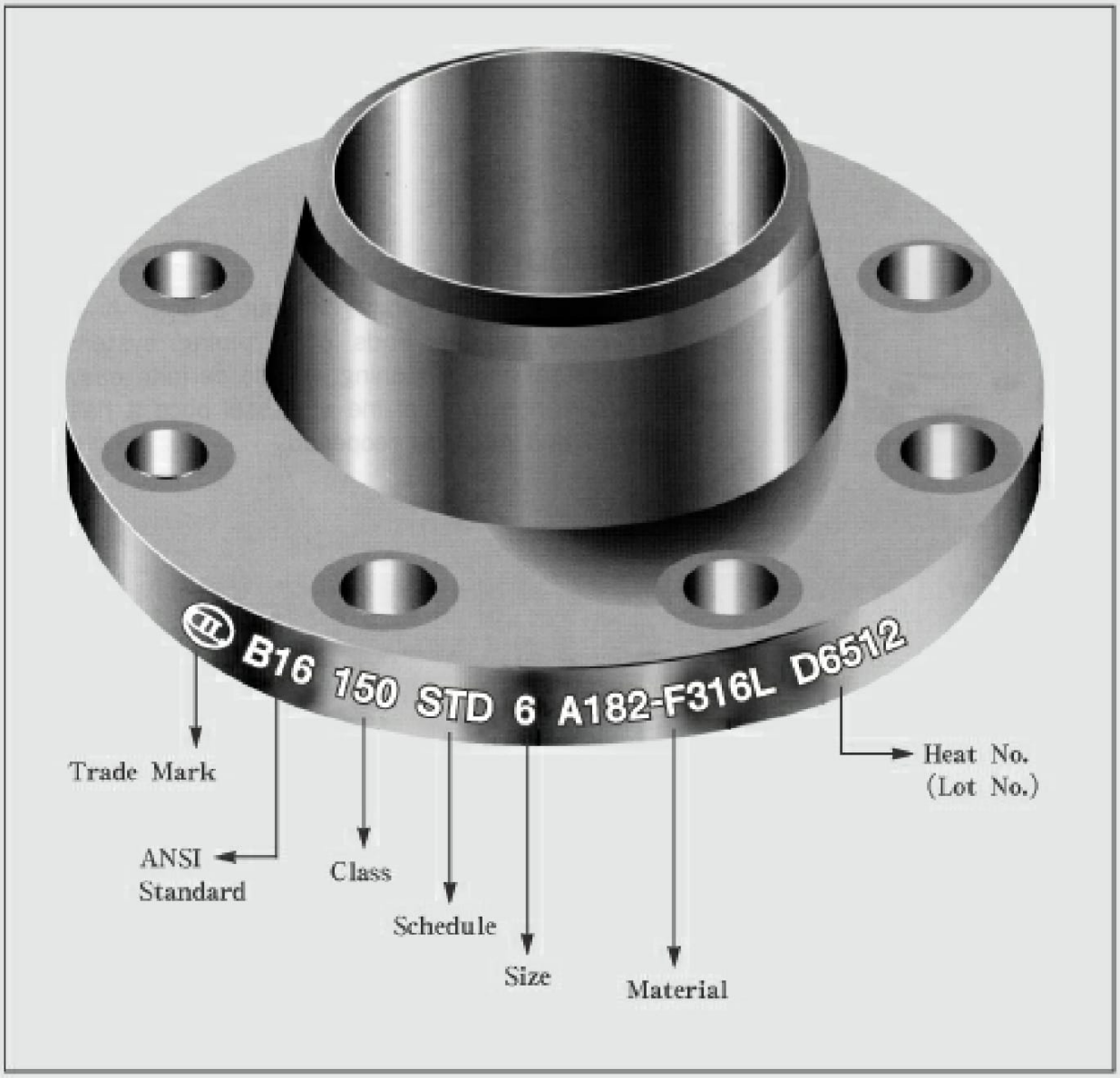

ANSI FLANGES

- Class 150 Flanges
- Class 300 Flanges
- Class 400 Flanges
- Class 600 Flanges
- Class 900 Flanges
- Class 1500 Flanges
- Class 2500 Flanges

CLASS 150 FLANGES

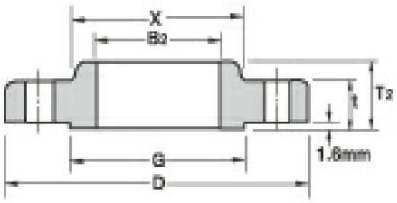

SLIP - ON

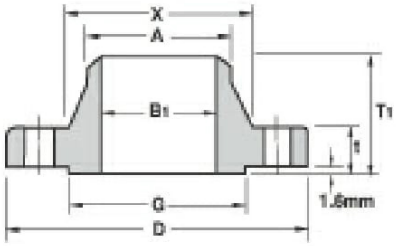

WELDING NECK

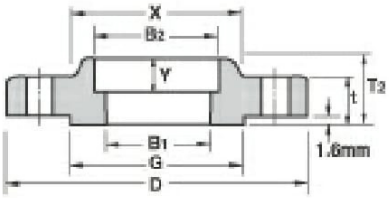

SOCKET WELDING

ANSI B16.5 FORGED FLANGES

Unit : mm

Nominal Pipe Size	Outside Diam.	O.D.of Raised Face	Diam. at Base of Hub	Thick-ness	Bore			Length thru Hub			Diam.of Hub at Bevel	Radius of Fillet	Thread Length
					Welding Neck, Socket Welding	Slip-on, Socket Welding	Lap Joint	Welding Neck	Slip-on, Threaded, Socket Welding	Lap Joint			
	D	G	X	t	B_1	B_2	B_3	T_1	T_2	T_3	A	R	Q
1/2	89	35.1	30.2	11.2	15.7	22.4	22.9	47.8	15.7	15.7	21.3	3.0	15.7
3/4	99	42.9	38.1	12.7	20.8	27.7	28.2	52.3	15.7	15.7	26.7	3.0	15.7
1	108	50.8	49.3	14.2	26.7	34.5	35.1	55.6	17.5	17.5	33.5	3.0	17.5
1 1/4	117	63.5	58.7	15.7	35.1	43.2	43.7	57.2	20.6	20.6	42.2	4.8	20.6
1 1/2	127	73.2	65.0	17.5	40.9	49.5	50.0	62.0	22.4	22.4	48.3	6.4	22.4
2	152	91.9	77.7	19.1	52.6	62.0	62.5	63.5	25.4	25.4	60.5	7.9	25.4
2 1/2	178	104.6	90.4	22.4	62.7	74.7	75.4	69.9	28.4	28.4	73.2	7.9	28.4
3	191	127.0	108.0	23.9	78.0	90.7	91.4	69.9	30.2	30.2	88.9	9.7	30.2
3 1/2	216	139.7	122.2	23.9	90.2	103.4	104.1	71.4	31.8	31.8	101.6	9.7	31.8
4	229	157.2	134.9	23.9	102.4	116.1	116.8	76.2	33.3	33.3	114.3	11.2	33.3
5	254	185.7	163.6	23.9	128.3	143.8	144.5	88.9	36.6	36.6	141.2	11.2	36.6
6	279	215.9	192.0	25.4	154.2	170.7	171.5	88.9	39.6	39.6	168.4	12.7	39.6
8	343	269.7	246.1	28.4	202.7	221.5	222.3	101.6	44.5	44.5	219.2	12.7	44.5
10	406	323.9	304.8	30.2	254.5	276.4	277.4	101.6	49.3	49.3	273.1	12.7	49.3
12	483	381.0	365.3	31.8	304.8	327.2	328.2	114.3	55.6	55.6	323.9	12.7	55.6
14	533	412.8	400.1	35.1	336.6	359.2	360.2	127.0	57.2	79.2	355.6	12.7	57.2
16	597	469.9	457.2	36.6	387.4	410.5	411.2	127.0	63.5	87.4	406.4	12.7	63.5
18	635	533.4	505.0	39.6	438.2	461.8	462.3	139.7	68.3	96.8	457.2	12.7	68.3
20	699	584.2	558.8	42.9	489.0	513.1	514.4	144.5	73.2	103.1	508.0	12.7	73.2
24	813	692.2	663.4	47.8	590.6	616.0	616.0	152.4	82.6	111.3	609.6	12.7	82.6

Notes:

(1) For the 'Bore' (B_1)other than Standard Wall Thickness, refer to page 92.

(2) Class 150 flanges except Lap Joint will be furnished with 0.06"(1.6mm) raised face, which is included in 'Thickness' (t) and 'Length through Hub' (T1), (T2).

(3) For Slip-on, Threaded, Socket Welding and Lap Joint Flanges, the hubs can be shaped either vertical from base to top or tapered within the limits of 7 degrees.

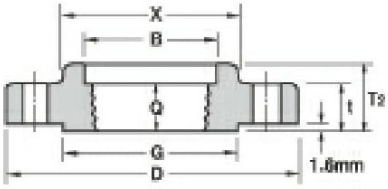

THREADED

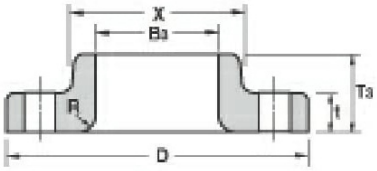

LAP JOINT

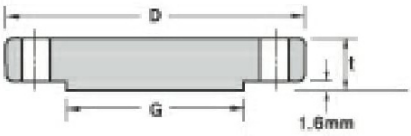

BLIND

Unit : mm

Nominal Pipe Size	Depth of Socket	Drilling			Bolting				Approximate Weight									
		Bolt Circle Diam.	Number of Holes	Diam. of Holes	Diam. of Bolts (inch)	Machine Bolt Length	Stud Bolt Length		Welding Neck		Slip-on and Threaded		Lap Joint		Blind		Socket Welding	
						Raised Face	Raised Face	Ring Joint										
	Y								Kg	lb	Kg	lb	Kg	lb	Kg	lb	Kg	lb
1/2	9.7	60.5	4	15.7	1/2	50.8	57.2	-	0.51	1.10	0.47	1.00	0.51	1.00	0.47	1.00	0.47	1.00
3/4	11.2	69.9	4	15.7	1/2	50.8	63.5	-	0.73	1.60	0.58	1.30	0.64	1.40	0.63	1.40	0.59	1.30
1	12.7	79.2	4	15.7	1/2	57.2	63.5	76.2	1.07	2.40	0.86	1.90	0.93	1.80	0.94	2.10	0.87	1.90
1 1/4	14.2	88.9	4	15.7	1/2	57.2	69.9	82.6	1.40	3.10	1.08	2.40	1.16	2.00	1.23	2.70	1.11	2.40
1 1/2	15.7	98.6	4	15.7	1/2	63.5	69.9	82.6	1.81	4.00	1.41	3.10	1.51	3.30	1.62	3.60	1.45	3.20
2	17.5	120.7	4	19.1	5/8	69.9	82.6	95.3	2.59	5.70	2.26	5.00	2.38	5.20	2.64	5.80	2.33	5.00
2 1/2	19.1	139.7	4	19.1	5/8	76.2	88.9	101.6	4.28	9.40	3.43	7.60	3.60	7.90	4.06	9.00	3.55	7.80
3	20.6	152.4	4	19.1	5/8	76.2	88.9	101.6	5.18	11.40	3.87	8.50	4.04	8.90	4.90	10.80	4.02	8.90
3 1/2	22.4	177.8	8	19.1	5/8	76.2	88.9	101.6	5.45	12.00	4.99	11.00	4.99	11.00	5.90	13.00	4.99	11.00
4	23.9	190.5	8	19.1	5/8	76.2	88.9	101.6	7.32	16.10	5.75	12.70	5.96	13.00	7.41	16.30	5.99	13.20
5	23.9	215.9	8	22.4	3/4	82.6	95.3	108.0	8.91	19.60	6.22	13.70	6.44	14.00	8.76	19.30	6.68	14.70
6	26.9	241.3	8	22.4	3/4	82.6	101.6	114.3	11.26	24.80	7.38	16.30	7.59	16.70	11.31	24.90	7.99	17.60
8	31.8	298.5	8	22.4	3/4	88.9	108.0	120.7	17.68	39.00	12.36	27.30	12.66	27.90	19.92	43.90	13.29	29.30
10	33.3	362.0	12	25.4	7/8	101.6	114.3	127.0	24.79	54.70	17.10	37.70	16.78	37.00	29.39	64.80	19.50	43.00
12	39.6	431.8	12	25.4	7/8	101.6	120.7	133.4	38.98	85.90	27.68	61.00	28.30	62.40	43.70	96.30	29.03	64.00
14	41.4	476.3	12	28.4	1	114.3	133.4	146.1	51.71	114.00	35.20	77.60	41.50	91.50	59.42	140.00	38.56	85.00
16	44.5	539.8	16	28.4	1	114.3	133.4	146.1	64.41	142.00	42.18	93.00	52.98	116.80	77.11	170.00	44.49	98.00
18	49.3	577.9	16	31.8	1 1/8	127.0	146.1	158.8	74.84	165.00	49.71	109.60	59.00	130.00	94.80	209.00	54.43	120.00
20	54.1	635.0	20	31.8	1 1/8	139.7	158.8	171.5	89.36	197.00	65.50	140.00	72.12	159.00	123.38	272.00	70.31	155.00
24	63.5	749.3	20	35.1	1 1/4	152.4	171.5	184.5	119.66	263.80	90.50	199.50	99.02	218.30	188.24	415.00	95.25	210.00

(4) Blind Flanges may be made with the same hub as that used for Slip-on Flanges or without hub.
(5) The gasket surface and backside (bearing surface for bolting) are made parallel within 1 degree. To accomplish parallelism, spot facing is carried out according to MSS SP-9, without reducing thickness (t).
(6) Depth of Socket (Y) is covered by ANSI B16.5 only in sizes through 3 inch, over 3 inch is at the manufacturer's option.

CLASS 300 FLANGES

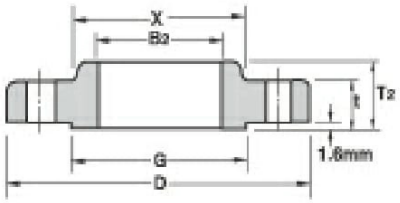

SLIP - ON

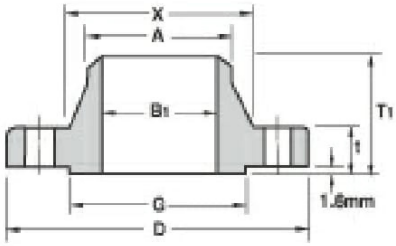

WELDING NECK

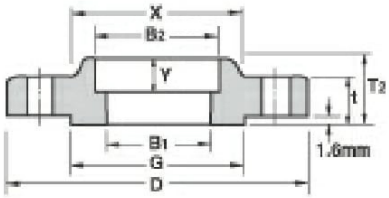

SOCKET WELDING

ANSI B16.5 FORGED FLANGES

Unit : mm

Nominal Pipe Size	Outside Diam.	Diam. at Base of Hub	O.D.of Raised Face	Thick-ness	Bore: Welding Neck, Socket Welding	Bore: Slip-on, Socket Welding	Bore: Lap Joint	Bore: Counter Bore Min. Threaded Min.	Length thru Hub: Welding Neck	Length thru Hub: Slip-on, Threaded, Socket Welding	Length thru Hub: Lap Joint	Diam.of Hub at Bevel	Radius of Fillet	Thread Length
	D	X	G	t	B_1	B_2	B_3	B	T_1	T_2	T_3	A	R	Q
1/2	95	38.1	35.1	14.2	15.7	22.4	22.9	23.6	52.3	22.4	22.4	21.3	3.0	15.7
3/4	117	47.8	42.9	15.7	20.8	27.7	28.2	29.0	57.2	25.4	25.4	26.7	3.0	15.7
1	124	53.8	50.8	17.5	26.7	34.5	35.1	35.8	62.0	26.9	26.9	33.5	3.0	17.5
1 1/4	133	63.5	63.5	19.1	35.1	43.2	43.7	44.5	65.0	26.9	26.9	42.2	4.8	20.6
1 1/2	155	69.9	73.2	20.6	40.9	49.5	50.0	50.5	68.3	30.2	30.2	48.3	6.4	22.4
2	165	84.1	91.9	22.4	52.6	62.0	62.5	63.5	69.9	33.3	33.3	60.5	7.9	26.4
2 1/2	191	100.1	104.6	25.4	62.7	74.7	75.4	76.2	76.2	38.1	38.1	73.2	7.9	31.8
3	210	117.3	127.0	28.4	78.0	90.7	91.4	92.2	79.2	42.9	42.9	88.9	9.7	31.8
3 1/2	229	133.4	139.7	30.2	90.2	103.4	104.1	104.9	81.0	44.5	44.5	101.6	9.7	36.6
4	254	146.1	157.2	31.8	102.4	116.1	116.8	117.6	85.9	47.8	47.8	114.3	11.2	36.6
5	279	177.8	185.7	35.1	128.3	143.8	144.5	144.5	98.6	50.8	50.8	141.2	11.2	42.9
6	318	206.2	215.9	36.6	154.2	170.7	171.5	171.5	98.6	52.3	52.3	168.4	12.7	46.0
8	381	260.4	269.7	41.1	202.7	221.5	222.3	222.3	111.3	62.0	62.0	219.2	12.7	50.8
10	445	320.5	323.9	47.8	254.5	276.4	277.4	276.4	117.3	66.5	95.3	273.1	12.7	55.6
12	521	374.7	381.0	50.8	304.8	327.2	328.2	328.7	130.0	73.2	101.6	323.9	12.7	60.5
14	584	425.5	412.8	53.8	336.6	359.2	360.2	360.4	142.7	76.2	111.3	355.6	12.7	63.5
16	648	482.6	469.9	57.2	387.4	410.5	411.2	411.2	146.1	82.6	120.7	406.4	12.7	68.3
18	711	533.4	533.4	60.5	438.2	461.8	462.3	462.0	158.8	88.9	130.0	457.2	12.7	69.9
20	775	587.2	584.2	63.5	489.0	513.1	514.4	512.8	162.1	95.3	139.7	508.0	12.7	73.2
24	914	701.5	692.2	69.9	590.6	616.0	616.0	614.4	188.1	106.4	152.4	609.6	12.7	82.6

Notes:

(1) For the 'Bore' (B_1)other than Standard Wall Thickness, refer to page 92.

(2) Class 300 flanges except Lap Joint will be furnished with 0.06"(1.6mm) raised face, which is included in 'Thickness' (t) and 'Length through Hub' (T1), (T2).

(3) For Slip-on, Threaded, Socket Welding and Lap Joint Flanges, the hubs can be shaped either vertical from base to top or tapered within the limits of 7 degrees.

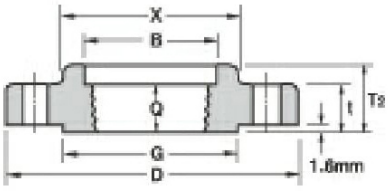

THREADED

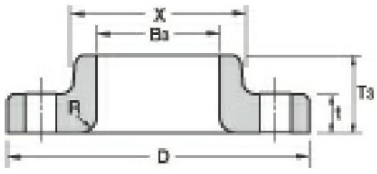

LAP JOINT

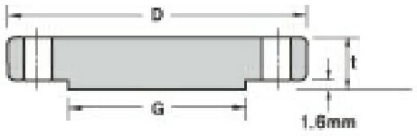

BLIND

Unit : mm

Nominal Pipe Size	Depth of Socket	Drilling			Bolting				Approximate Weight									
		Bolt Circle Diam.	Number of Holes	Diam. of Holes	Diam. of Bolts (inch)	Machine Bolt Length	Stud Bolt Length		Welding Neck		Slip-on and Threaded		Lap Joint		Blind		Socket Welding	
						Raised Face	Raised Face	Ring Joint										
	Y								Kg	lb	Kg	lb	Kg	lb	Kg	lb	Kg	lb
1/2	9.7	66.5	4	15.7	1/2	57.2	63.5	76.2	0.78	1.70	0.62	1.40	0.61	1.30	0.62	1.40	0.62	1.40
3/4	11.2	82.6	4	19.1	5/8	63.5	76.2	88.9	1.34	3.00	1.15	2.50	1.15	2.50	1.16	2.50	1.19	2.60
1	12.7	88.9	4	19.1	5/8	63.5	76.2	88.9	1.64	3.60	1.39	3.10	1.38	3.00	1.42	3.00	1.44	3.20
1 1/4	14.2	98.6	4	19.1	5/8	69.9	82.6	95.3	2.06	4.50	1.67	3.70	1.66	3.70	1.79	3.90	1.73	3.80
1 1/2	15.7	114.3	4	22.4	3/4	76.2	88.9	101.6	3.06	6.70	2.53	5.60	2.52	5.60	2.68	5.90	2.62	5.80
2	17.5	127.0	8	19.1	5/8	76.2	88.9	101.6	3.40	7.50	2.80	6.20	2.79	6.20	3.09	6.80	2.94	6.50
2 1/2	19.1	149.4	8	22.4	3/4	82.6	101.6	114.3	5.31	11.70	4.25	9.40	4.22	9.30	4.75	10.50	4.49	9.90
3	20.6	168.1	8	22.4	3/4	88.9	108.0	120.7	7.32	16.10	5.81	12.80	5.78	12.70	6.79	14.90	6.20	13.70
3 1/2	22.4	184.2	8	22.4	3/4	95.3	108.0	127.0	8.17	18.00	7.72	17.00	7.72	17.00	9.53	21.00		
4	23.9	200.2	8	22.4	3/4	95.3	114.3	127.0	11.30	24.90	10.13	22.30	10.07	22.20	12.00	26.50		
5	23.9	235.0	8	22.4	3/4	108.0	120.7	133.4	15.12	33.30	12.58	27.70	12.52	27.60	15.96	35.20		
6	26.9	269.7	12	22.4	3/4	108.0	120.7	139.7	19.68	43.40	16.04	35.40	15.95	35.20	21.20	46.70		
8	31.8	330.2	12	25.4	7/8	120.7	139.7	152.4	30.48	67.20	24.50	54.00	24.37	53.70	34.60	76.30		
10	33.3	387.4	16	28.4	1	139.7	158.8	171.5	43.74	96.40	34.16	75.30	39.92	88.00	55.34	122.00		
12	39.6	450.9	16	31.8	1 1/8	146.1	171.5	184.2	64.41	142.00	51.26	113.00	58.70	129.40	78.90	174.00		
14	41.4	514.4	20	31.8	1 1/8	158.1	177.8	190.5	88.30	194.70	72.12	159.00	83.46	184.00	107.05	236.00		
16	44.5	571.5	20	35.1	1 1/4	165.1	190.5	203.2	112.94	249.00	90.40	199.30	106.14	234.00	139.25	307.00		
18	49.3	628.7	24	35.1	1 1/4	171.5	196.9	209.6	138.34	305.00	109.00	240.30	133.95	295.30	176.90	396.00		
20	54.1	685.8	24	35.1	1 1/4	184.2	203.2	222.3	167.37	369.00	136.00	300.00	157.65	347.60	223.17	492.00		
24	63.5	812.8	24	41.1	1 1/2	203.2	228.6	254.0	235.41	519.00	204.00	449.70	240.40	530.00	342.00	754.00		

(4) Blind Flanges may be made with the same hub as that used for Slip-on Flanges or without hub.
(5) The gasket surface and backside (bearing surface for bolting) are made parallel within 1 degree. To accomplish parallelism, spot facing is carried out according to MSS SP-9, without reducing thickness (t).
(6) Depth of Socket (Y) is covered by ANSI B16.5 only in sizes through 3 inch, over 3 inch is at the manufacturer's option.

CLASS 400 FLANGES

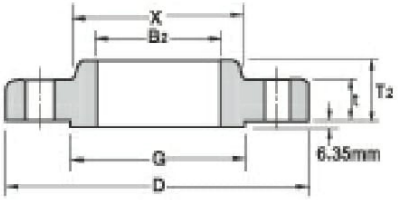

SLIP - ON

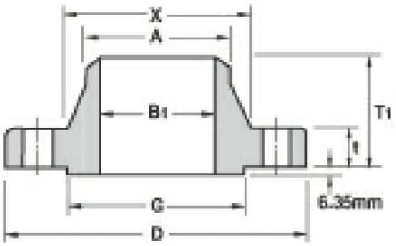

WELDING NECK

ANSI B16.5 FORGED FLANGES

Unit : mm

Nominal Pipe Size	Outside Diam.	Diam. at Base of Hub	O.D.of Raised Face	Thick-ness	Bore				Length thru Hub			Diam. of Hub at Bevel
					Welding Neck	Slip-on	Lap Joint	Counter Bore Min.	Welding Neck	Slip-on And Threaded	Lap Joint	
	D	X	G	t	B_1	B_2	B_3	B	T_1	T_2	T_3	A
1/2	95	38.1	35.1	14.2	See Note(1) To be specified by purchaser.	22.4	22.9	23.6	52.3	22.4	22.4	21.3
3/4	117	47.8	42.9	15.7		27.7	28.2	29.0	57.2	25.4	25.4	26.7
1	124	53.8	50.8	17.5		34.5	35.1	35.8	62.0	26.9	26.9	33.5
1 1/4	133	63.5	63.5	20.6		43.2	43.7	44.5	66.5	28.4	28.4	42.2
1 1/2	155	69.9	73.2	22.4		49.5	50.0	50.5	69.9	31.8	31.8	48.3
2	165	84.1	91.9	25.4		62.0	62.5	63.5	73.2	36.6	36.6	60.5
2 1/2	191	100.1	104.6	28.4		74.7	75.4	76.2	79.2	41.1	41.1	73.2
3	210	117.3	127.0	31.8		90.7	91.4	92.2	82.6	46.0	46.0	88.9
3 1/2	229	133.4	139.7	35.1		103.4	104.1	104.9	85.9	49.3	49.3	101.6
4	254	146.1	157.2	35.1		116.1	116.8	117.6	88.9	50.8	50.8	114.3
5	279	177.8	185.7	38.1		143.8	144.5	144.5	101.6	53.8	53.8	141.2
6	318	206.2	215.9	41.1		170.7	171.5	171.5	103.1	57.2	57.2	168.4
8	381	260.4	269.7	47.8		221.5	222.3	222.3	117.3	68.3	68.3	219.2
10	445	320.5	323.9	53.8		276.4	277.4	276.4	124.0	73.2	101.6	273.1
12	521	374.7	381.0	57.2		327.2	328.2	328.7	136.7	79.2	108.0	323.9
14	584	425.5	412.8	60.5		359.2	360.2	360.4	149.4	84.1	117.3	355.6
16	648	482.6	469.9	63.5		410.5	411.2	411.2	152.4	93.7	127.0	406.4
18	711	533.4	533.4	66.5		461.8	462.3	462.0	165.1	98.6	136.7	457.2
20	775	587.2	584.2	69.9		513.1	514.4	512.8	168.1	101.6	146.1	508.0
24	914	701.5	692.2	76.2		616.0	616.0	614.4	174.8	114.3	158.8	609.6

Notes:

(1) For the inside diameter of pipes (corresponding to 'Bore' (B_1) of Welding Neck Flanges), refer to page 92.

(2) Class 400 flanges except Lap Joint will be furnished with 0.25"(6.35mm) raised face, which is not included in 'Thickness' (t) and 'Length through Hub' (T_1), (T_2).

(3) For Slip-on, Threaded and Lap Joint Flanges, the hubs can be shaped either vertical from base to top or tapered within the limits of 7 degrees.

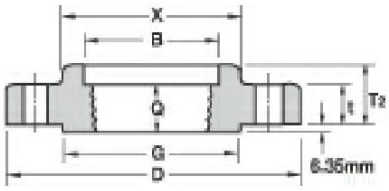

THREADED

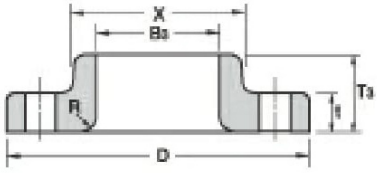

LAP JOINT

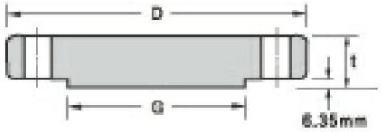

BLIND

Unit : mm

Nominal Pipe Size	radius of Fillet	Thread Length	Drilling			Bolting				Approximate Weight							
			Bolt Circle Diam.	Number of Holes	Diam. of Holes	Diam. of Bolts (inch)	Stud Bolt Length			Welding Neck		Slip-on and Threaded		Lap Joint		Blind	
							0.25" Raised Face	Male-Female Tongue-Groove	Ring Joint								
	R	Q								Kg	lb	Kg	lb	Kg	lb	Kg	lb
1/2	3.0	15.7	66.5	4	15.7	1/2	76.2	69.9	76.2	1.36	3.00	0.91	2.00	0.80	1.80	0.91	2.00
3/4	3.0	15.7	82.6	4	19.1	5/8	88.9	82.6	88.9	1.59	3.50	1.36	3.00	1.36	3.00	1.40	3.00
1	3.0	17.5	88.9	4	19.1	5/8	88.9	82.6	88.9	1.81	4.00	1.59	3.50	1.59	3.50	1.70	3.80
1 1/4	4.8	20.6	98.6	4	19.1	5/8	95.3	88.9	95.3	2.50	5.50	2.10	4.60	2.04	4.50	2.27	5.00
1 1/2	6.4	22.4	114.3	4	22.4	3/4	108.0	101.6	108.0	3.63	8.00	3.10	6.80	2.95	6.50	3.40	7.50
2	7.9	28.4	127.0	8	19.1	5/8	108.0	101.6	108.0	4.54	10.00	3.63	8.00	3.63	8.00	4.40	9.70
2 1/2	7.9	31.8	149.4	8	22.4	3/4	120.7	114.3	120.7	6.35	14.00	5.44	12.00	4.99	11.00	6.80	15.00
3	9.7	35.1	168.1	8	22.4	3/4	127.0	120.7	127.0	8.17	18.00	7.26	16.00	6.35	14.00	8.90	19.60
3 1/2	9.7	39.6	184.2	8	25.4	7/8	139.7	133.4	139.7	11.80	26.00	9.53	21.00	9.08	20.00	13.17	29.00
4	11.2	36.6	200.2	8	25.4	7/8	139.7	133.4	139.7	13.61	30.00	10.89	24.00	9.98	22.00	14.40	31.70
5	11.2	42.9	235.0	8	25.4	7/8	146.1	139.7	146.1	17.69	39.00	14.07	31.00	13.15	29.00	19.50	43.00
6	12.7	46.0	269.7	12	25.4	7/8	152.4	146.1	152.4	22.23	49.00	19.98	44.00	16.78	37.00	27.67	61.00
8	12.7	50.8	330.2	12	28.4	1	171.5	165.1	171.5	35.38	78.00	30.40	67.00	26.16	59.00	45.36	100.00
10	12.7	55.6	387.4	16	31.8	1 1/8	190.5	184.2	190.5	49.89	110.00	41.28	91.00	43.09	95.00	68.00	150.00
12	12.7	60.5	450.9	16	35.1	1 1/4	203.2	196.9	203.2	72.57	160.00	59.02	130.00	68.95	152.00	98.00	216.00
14	12.7	63.5	514.4	20	35.1	1 1/4	209.6	203.2	209.6	105.69	233.00	81.72	180.00	95.25	210.00	131.66	290.00
16	12.7	68.3	571.5	20	38.1	1 3/8	222.3	215.9	222.3	133.30	294.00	106.69	235.00	127.00	280.00	167.00	368.00
18	12.7	69.9	628.7	24	38.1	1 3/8	228.6	222.3	228.6	158.90	350.30	129.39	285.30	156.49	345.00	206.57	455.40
20	12.7	73.2	685.8	24	41.1	1 1/2	241.3	235.0	247.7	193.00	425.50	152.00	335.00	190.51	420.00	261.00	575.40
24	12.7	82.6	812.8	24	47.8	1 3/4	266.7	260.4	279.4	281.48	620.50	231.54	510.50	278.96	615.00	395.00	870.80

(4) Blind Flanges may be made with the same hub as that used for Slip-on Flanges or without hub.
(5) The gasket surface and backside (bearing surface for bolting) are made parallel within 1 degree. To accomplish parallelism, spot facing is carried out according to MSS SP-9, without reducing thickness (t).
(6) Depth of Socket (Y) is covered by ANSI B16.5 only in sizes through 3 inch, over 3 inch is at the manufacturer's option.

CLASS 600 FLANGES

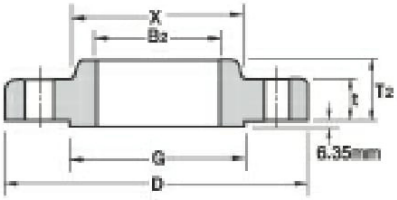

SLIP - ON

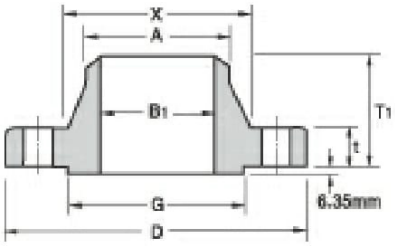

WELDING NECK

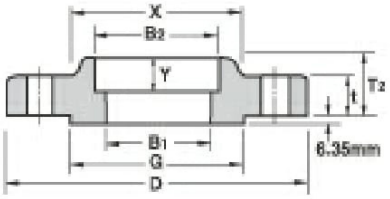

SOCKET WELDING

ANSI B16.5 FORGED FLANGES

Unit : mm

Nominal Pipe Size	Outside Diam.	Diam. at Base of Hub	O.D.of Raised Face	Thick-ness	Bore: Welding Neck Socket Welding	Bore: Slip-on Socket Welding	Bore: Lap Joint	Bore: Counter Bore Min. Threaded Min.	Length thru Hub: Welding Neck	Length thru Hub: Slip-on Threaded Socket Welding	Length thru Hub: Lap Joint	Diam.of Hub at Bevel	Radius of Fillet	Thread Length
	D	X	G	t	B_1	B_2	B_3	B	T_1	T_2	T_3	A	R	Q
1/2	95	38.1	35.1	14.2	See Note(1) To be specified by purchaser.	22.4	22.9	23.6	52.3	22.4	22.4	21.3	3.0	15.7
3/4	117	47.8	42.9	15.7		27.7	28.2	29.0	57.2	25.4	25.4	26.7	3.0	15.7
1	124	53.8	50.8	17.5		34.5	35.1	35.8	62.0	26.9	26.9	33.5	3.0	17.5
1 1/4	133	63.5	63.5	20.6		43.2	43.7	44.5	66.5	28.4	28.4	42.2	4.8	20.6
1 1/2	155	69.9	73.2	22.4		49.5	50.0	50.5	69.9	31.8	31.8	48.3	6.4	22.4
2	165	84.1	91.9	25.4		62.0	62.5	63.5	73.2	36.6	36.6	60.5	7.9	28.4
2 1/2	191	100.1	104.6	28.4		74.7	75.4	76.2	79.2	41.1	41.1	73.2	7.9	31.8
3	210	117.3	127.0	31.8		90.7	91.4	92.2	82.6	46.0	46.0	88.9	9.7	35.1
3 1/2	229	133.4	139.7	35.1		103.4	104.1	104.9	85.9	49.3	49.3	101.6	9.7	39.6
4	273	152.4	157.2	38.1		116.1	116.8	117.6	101.6	53.8	53.8	114.3	11.2	41.1
5	330	189.0	185.7	44.5		143.8	144.5	144.5	114.3	60.5	60.5	141.2	11.2	47.8
6	356	222.3	215.9	47.8		170.7	171.5	171.5	117.3	66.5	66.5	168.4	12.7	50.8
8	419	273.1	269.7	55.6		221.5	222.3	222.3	133.4	76.2	76.2	219.2	12.7	57.2
10	508	342.9	323.9	63.5		276.4	277.4	276.4	152.4	85.9	111.3	273.1	12.7	65.0
12	559	400.1	381.0	66.5		327.2	328.2	328.7	155.4	91.9	117.3	323.9	12.7	69.9
14	603	431.8	412.8	69.9		359.2	360.2	360.4	165.1	93.7	127.0	355.6	12.7	73.2
16	686	495.3	469.9	76.2		410.5	411.2	411.2	177.8	106.4	139.7	406.4	12.7	77.7
18	743	546.1	533.4	82.6		461.8	462.3	462.0	184.2	117.3	152.4	457.2	12.7	79.2
20	813	609.6	584.2	88.9		513.1	514.4	512.8	190.5	127.0	165.1	508.0	12.7	82.6
24	940	717.6	692.2	101.6		616.0	616.0	614.4	203.2	139.7	184.2	609.6	12.7	91.9

Notes:

(1) For the inside diameter of pipes (corresponding to 'Bore' (B_1) of Welding Neck Flanges), refer to page 92.

(2) Class 600 flanges except Lap Joint will be furnished with 0.25"(6.35mm) raised face, which is not included in 'Thickness' (t) and 'Length through Hub' (T_1), (T_2).

(3) For Slip-on, Threaded and Lap Joint and Socket Welding Flanges, the hubs can be shaped either vertical from base to top or tapered within the limits of 7 degrees.

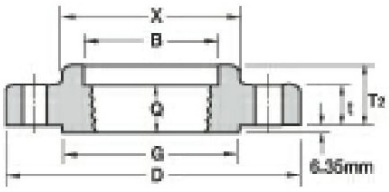

THREADED

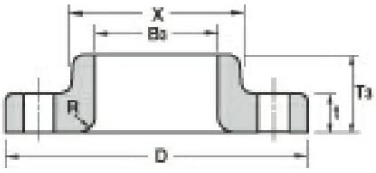

LAP JOINT

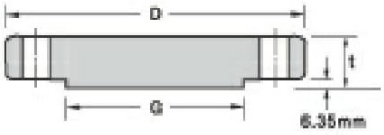

BLIND

Unit : mm

Nominal Pipe Size	Depth of Socket	Drilling			Bolting				Approximate Weight									
						Stud Bolt Length												
		Bolt Circle Diam.	Number of Holes	Diam. of Holes	Diam. of Bolts (inch)	0.25" Raised Face	Male-Female Tongue-Groove	Ring Joint	Welding Neck		Slip-on and Threaded		Lap Joint		Blind		Socket Welding	
	Y								Kg	lb	Kg	lb	Kg	lb	Kg	lb	Kg	lb
1/2	9.7	66.5	4	15.7	1/2	76.2	69.9	76.2	0.90	2.00	0.91	2.00	0.80	1.80	0.91	2.00	0.91	2.00
3/4	11.2	82.6	4	19.1	5/8	88.9	82.6	88.9	1.59	3.50	1.40	3.00	1.36	3.00	1.40	3.00	1.36	3.00
1	12.7	88.9	4	19.1	5/8	88.9	82.6	88.9	1.90	4.00	1.70	3.70	1.59	3.50	1.81	4.00	1.81	4.00
1 1/4	14.2	98.6	4	19.1	5/8	95.3	88.9	95.3	2.49	5.50	2.27	5.00	2.04	4.50	2.40	5.30	2.60	5.70
1 1/2	15.7	114.3	4	22.4	3/4	108.0	101.6	108.0	3.63	8.00	3.10	6.80	2.95	6.50	3.40	7.50	3.18	7.00
2	17.5	127.0	8	19.1	5/8	108.0	101.6	108.0	4.54	10.00	3.63	8.00	3.63	8.00	4.40	9.70	3.90	8.60
2 1/2	19.1	149.4	8	22.4	3/4	120.7	114.3	120.7	6.35	14.00	5.44	12.00	4.99	11.00	6.80	15.00	5.90	13.00
3	20.6	168.1	8	22.4	3/4	127.0	120.7	127.0	8.46	18.00	7.26	16.00	6.35	14.00	8.90	19.60	7.40	16.30
3 1/2	22.4	184.2	8	25.4	7/8	139.7	133.4	139.7	11.80	26.00	9.53	21.00	9.08	20.00	13.17	29.00		
4	23.9	215.9	8	25.4	7/8	146.1	139.7	146.1	16.78	37.00	14.97	33.00	14.06	31.00	18.60	41.00		
5	23.9	266.7	8	28.4	1	165.1	158.8	165.1	30.87	68.00	28.50	62.80	27.50	60.00	30.84	68.00		
6	26.9	292.1	12	28.4	1	171.5	165.1	171.5	36.77	80.00	36.32	80.00	35.38	78.00	38.00	83.30		
8	31.8	349.3	12	31.8	1 1/8	190.5	184.2	196.9	50.80	112.00	44.00	97.00	50.80	112.00	62.20	137.00		
10	33.3	431.8	16	35.1	1 1/4	215.9	209.6	215.9	86.26	190.00	76.20	168.00	74.00	163.00	102.00	224.90		
12	39.6	489.0	20	35.1	1 1/4	222.3	215.9	222.3	102.51	226.00	97.52	215.00	108.86	240.00	132.00	291.00		
14	41.4	527.1	20	38.1	1 3/8	235.0	228.6	235.0	121.56	268.00	102.00	224.80	111.00	244.70	158.00	348.30		
16	44.5	603.3	20	41.1	1 1/2	254.0	247.7	254.0	177.06	290.00	149.82	330.20	165.71	365.30	224.73	495.40		
18	49.3	654.1	20	44.5	1 5/8	273.1	266.7	273.1	215.65	475.40	180.10	412.30	194.00	427.70	285.00	628.30		
20	54.1	723.9	24	44.5	1 5/8	285.8	279.4	292.1	267.86	590.50	231.54	510.50	258.78	570.50	365.00	804.70		
24	63.5	838.2	24	50.8	1 7/8	330.2	323.9	336.6	372.00	820.00	330.00	725.50	362.00	798.00	533.45	1176.0		

(4) Blind Flanges may be made with the same hub as that used for Slip-on Flanges or without hub.
(5) The gasket surface and backside (bearing surface for bolting) are made parallel within 1 degree. To accomplish parallelism, spot facing is carried out according to MSS SP-9, without reducing thickness (t).
(6) Depth of Socket (Y) is covered by ANSI B16.5 only in sizes through 3 inch, over 3 inch is at the manufacturer's option.

CLASS 900 FLANGES

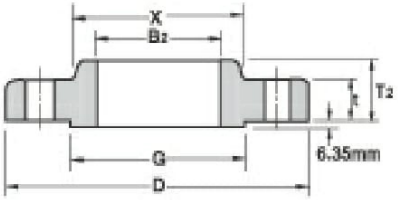

SLIP - ON

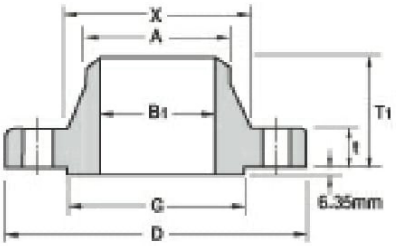

WELDING NECK

ANSI B16.5 FORGED FLANGES

Unit : mm

Nominal Pipe Size	Outside Diam.	Diam. at Base of Hub	O.D.of Raised Face	Thick-ness	Bore				Length thru Hub			Diam. of Hub at Bevel
					Welding Neck	Slip-on	Lap Joint	Counter Bore Min.	Welding Neck	Slip-on And Threaded	Lap Joint	
	D	X	G	t	B_1	B_2	B_3	B	T_1	T_2	T_3	A
1/2	121	38.1	35.1	22.4	See Note(1) To be specified by purchaser.	22.4	22.9	23.6	60.5	31.8	31.8	21.3
3/4	130	44.5	42.9	25.4		27.7	28.2	29.0	69.9	35.1	35.1	26.7
1	149	52.3	50.8	28.4		34.5	35.1	35.8	73.2	41.1	41.1	33.5
1 1/4	159	63.5	63.5	28.4		43.2	43.7	44.5	73.2	41.1	41.1	42.2
1 1/2	178	69.9	73.2	31.8		49.5	50.0	50.5	82.6	44.5	44.5	48.3
2	216	104.6	91.9	38.1		62.0	62.5	63.5	101.6	57.2	57.2	60.5
2 1/2	244	124.0	104.6	41.1		74.7	75.4	76.2	104.6	63.5	63.5	73.2
3	241	127.0	127.0	38.1		90.7	91.4	92.2	101.6	53.8	53.8	88.9
4	292	158.8	157.2	44.5		116.1	116.8	117.6	114.3	69.9	69.9	114.3
5	349	190.5	185.7	50.8		143.8	144.5	144.5	127.0	79.2	79.2	141.2
6	381	235.0	215.9	55.6		170.7	171.5	171.5	139.7	85.9	85.9	168.4
8	470	298.5	269.7	63.5		221.5	222.3	222.3	162.1	101.6	114.3	219.2
10	546	368.3	323.9	69.9		276.4	277.4	276.4	184.2	108.0	127.0	273.1
12	610	419.1	381.0	79.2		327.2	328.2	328.7	200.2	117.3	142.7	323.9
14	641	450.9	412.8	85.9		359.2	360.2	360.4	212.9	130.3	155.4	355.6
16	705	508.0	469.9	88.9		410.5	411.2	411.2	215.9	133.4	165.1	406.4
18	787	565.2	533.4	101.6		461.8	462.3	462.0	228.6	152.4	190.5	457.2
20	857	622.3	584.2	108.0		513.1	514.4	512.8	247.7	158.8	209.6	508.0
24	1041	749.3	692.2	139.7		616.0	616.0	614.4	292.1	203.2	266.7	609.6

Notes:

(1) For the inside diameter of pipes (corresponding to 'Bore' (B_1) of Welding Neck Flanges), refer to page 92.

(2) Class 900 flanges except Lap Joint will be furnished with 0.25"(6.35mm) raised face, which is not included in 'Thickness' (t) and 'Length through Hub' (T_1), (T_2).

(3) For Slip-on, Threaded and Lap Joint Flanges, the hubs can be shaped either vertical from base to top or tapered within the limits of 7 degrees.

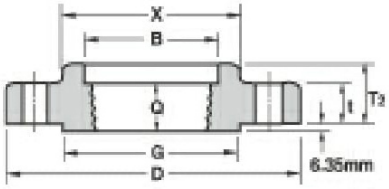

THREADED

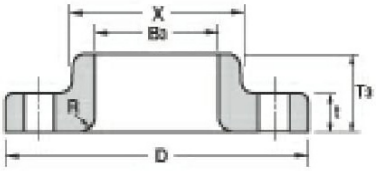

LAP JOINT

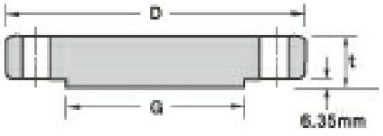

BLIND

Unit : mm

Nominal Pipe Size	radius of Fillet	Thread Length	Drilling			Bolting				Approximate Weight							
			Bolt Circle Diam.	Number of Holes	Diam. of Holes	Diam. of Bolts (inch)	Stud Bolt Length			Welding Neck		Slip-on and Threaded		Lap Joint		Blind	
							0.25" Raised Face	Male-Female Tongue-Groove	Ring Joint								
	R	Q								Kg	lb	Kg	lb	Kg	lb	Kg	lb
1/2	3.0	22.4	82.6	4	22.4	3/4	108.0	101.6	108.0	2.10	4.60	1.81	4.00	1.81	4.00	1.90	4.20
3/4	3.0	25.4	88.9	4	22.4	3/4	114.3	108.0	114.3	2.72	6.00	2.40	5.30	2.30	5.00	2.70	6.00
1	3.0	28.4	101.6	4	25.4	7/8	127.0	120.7	127.0	3.86	8.50	3.41	7.50	3.40	7.50	4.09	9.00
1 1/4	4.8	30.2	111.3	4	25.4	7/8	127.0	120.7	127.0	4.54	10.00	4.10	9.00	4.09	9.00	4.54	10.00
1 1/2	6.4	31.8	124.0	4	28.4	1	139.7	133.4	139.7	5.90	13.00	5.45	12.00	5.40	11.90	5.90	13.00
2	7.9	38.1	165.1	8	25.4	7/8	146.1	139.7	146.1	10.89	24.00	9.98	22.00	9.53	21.00	11.34	25.00
2 1/2	7.9	47.8	190.5	8	28.4	1	158.8	152.4	158.8	16.33	36.00	15.80	34.80	13.15	29.00	16.00	35.30
3	9.7	41.1	190.5	8	25.4	7/8	146.1	139.7	146.1	15.00	33.00	11.80	26.00	11.34	25.00	13.17	29.00
4	11.2	47.8	235.0	8	31.8	1 1/8	171.5	165.1	171.5	23.13	51.00	23.20	51.00	22.60	48.50	24.50	54.00
5	11.2	53.8	279.4	8	35.1	1 1/4	190.5	184.2	190.5	38.50	84.90	37.65	83.00	36.74	81.00	39.46	87.00
6	12.7	57.2	317.5	12	31.8	1 1/8	190.5	184.2	196.9	49.89	110.00	48.30	106.50	47.50	104.70	51.50	113.50
8	12.7	63.5	393.7	12	38.1	1 3/8	222.3	215.9	222.3	79.45	175.00	75.00	166.30	86.00	189.60	89.00	196.20
10	12.7	71.4	469.9	16	38.1	1 3/8	235.0	228.6	235.0	118.04	260.00	111.13	245.00	125.64	277.00	131.54	290.00
12	12.7	76.2	533.4	20	38.1	1 3/8	254.0	247.7	254.0	157.00	346.00	146.00	321.80	167.00	368.00	187.00	412.30
14	12.7	82.6	558.8	20	41.1	1 1/2	273.1	266.7	292.1	181.60	400.40	172.36	380.00	180.07	397.00	224.07	494.00
16	12.7	85.9	616.0	20	44.5	1 5/8	285.8	279.4	298.5	224.73	495.50	192.95	425.40	211.11	465.40	272.40	600.50
18	12.7	88.9	685.8	20	50.8	1 7/8	323.9	317.5	333.6	308.72	680.60	272.40	600.50	295.10	650.60	385.90	850.80
20	12.7	91.9	749.3	20	53.8	2	349.3	342.9	362.0	376.82	830.70	331.42	730.60	367.74	810.70	488.00	1076.00
24	12.7	101.6	901.7	20	66.5	2 1/2	438.2	431.8	457.2	685.00	1510.00	632.00	1393.30	700.00	1543.00	905.00	1995.00

(4) Blind Flanges may be made with the same hub as that used for Slip-on Flanges or without hub.
(5) The gasket surface and backside (bearing surface for bolting) are made parallel within 1 degree. To accomplish parallelism, spot facing is carried out according to MSS SP-9, without reducing thickness (t).
(6) Depth of Socket (Y) is covered by ANSI B16.5 only in sizes through 3 inch, over 3 inch is at the manufacturer's option.

CLASS 1500 FLANGES

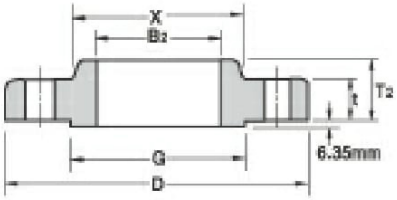

SLIP - ON

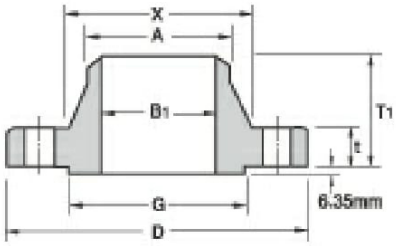

WELDING NECK

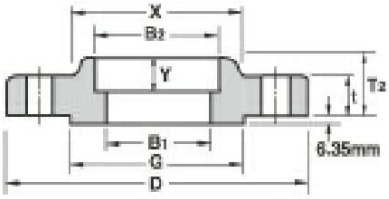

SOCKET WELDING

ANSI B16.5 FORGED FLANGES

Unit : mm

Nominal Pipe Size	Outside Diam.	Diam. at Base of Hub	O.D.of Raised Face	Thick-ness	Bore: Welding Neck Socket Welding	Bore: Slip-on Socket Welding	Bore: Lap Joint	Bore: Counter Bore Min. Threaded Min.	Length thru Hub: Welding Neck	Length thru Hub: Slip-on Threaded Socket Welding	Length thru Hub: Lap Joint	Diam.of Hub at Bevel	Radius of Fillet	Thread Length
	D	X	G	t	B_1	B_2	B_3	B	T_1	T_2	T_3	A	R	Q
1/2	121	38.1	35.1	22.4	See Note(1) To be specified by purchaser.	22.4	22.9	23.6	60.5	31.8	31.8	21.3	3.0	22.4
3/4	130	44.5	42.9	25.4		27.7	28.2	29.0	69.9	35.1	35.1	26.7	3.0	25.4
1	149	52.3	50.8	28.4		34.5	35.1	35.8	73.2	41.1	41.1	33.5	3.0	28.4
1 1/4	159	63.5	63.5	28.4		43.2	43.7	44.5	73.2	41.1	41.1	42.2	4.8	30.2
1 1/2	178	69.9	73.2	31.8		49.5	50.0	50.5	82.6	44.5	44.5	48.3	6.4	31.8
2	216	104.6	91.9	38.1		62.0	62.5	63.5	101.6	57.2	57.2	60.5	7.9	38.1
2 1/2	244	124.0	104.6	41.1		74.7	75.4	76.2	104.6	63.5	63.5	73.2	7.9	47.8
3	267	133.4	127.0	47.8		90.7	91.4	92.2	117.3	73.2	73.2	88.9	9.7	50.8
4	311	162.1	157.2	53.8		116.1	116.8	117.6	124.0	90.4	90.4	114.3	11.2	57.2
5	375	196.9	185.7	73.2		143.8	144.5	144.5	155.4	104.6	104.6	141.2	11.2	63.5
6	394	228.6	215.9	82.6		170.7	171.5	171.5	171.5	119.1	119.1	168.4	12.7	69.9
8	483	292.1	269.7	91.9		221.5	222.3	222.3	212.9	142.7	142.7	219.2	12.7	76.2
10	584	368.3	323.9	108.0		276.4	277.4	276.4	254.0	158.8	177.8	273.1	12.7	84.1
12	673	450.9	381.0	124.0		327.2	328.2	328.7	282.4	180.8	218.9	323.9	12.7	91.9
14	749	495.3	412.8	133.4		359.2	360.2	360.4	298.5	–	241.3	355.6	12.7	–
16	826	552.5	469.9	146.1		410.5	411.2	411.2	311.2	–	260.4	406.4	12.7	–
18	914	596.9	533.4	162.1		461.8	462.3	462.0	327.2	–	276.4	457.2	12.7	–
20	984	641.4	584.2	177.8		513.1	514.4	512.8	355.6	–	292.1	508.0	12.7	–
24	1168	762.0	692.2	203.2		616.0	616.0	614.4	406.4	–	330.2	609.6	12.7	–

Notes:

(1) For the inside diameter of pipes (corresponding to 'Bore' (B_1) of Welding Neck Flanges), refer to page 92.

(2) Class 1500 flanges except Lap Joint will be furnished with 0.25"(6.35mm) raised face, which is not included in "Thickness" (t) and "Length through Hub" (T_1), (T_2).

(3) For Slip-on, Threaded and Lap Joint and Socket Welding Flanges, the hubs can be shaped either vertical from base to top or tapered within the limits of 7 degrees.

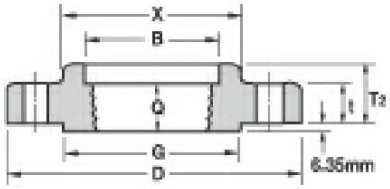

THREADED

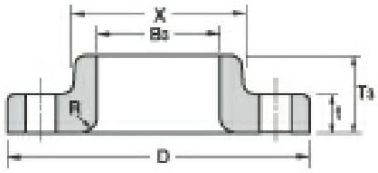

LAP JOINT

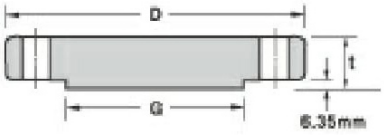

BLIND

Unit : mm

Nominal Pipe Size	Depth of Socket	Drilling			Bolting				Approximate Weight									
						Stud Bolt Length												
		Bolt Circle Diam.	Number of Holes	Diam. of Holes	Diam. of Bolts (inch)	0.25" Raised Face	Male-Female Tongue-Groove	Ring Joint	Welding Neck		Slip-on and Threaded		Lap Joint		Blind		Socket Welding	
	Y								Kg	lb	Kg	lb	Kg	lb	Kg	lb	Kg	lb
1/2	9.7	82.6	4	22.4	3/4	108.0	101.6	108.0	2.10	4.60	1.80	4.00	1.80	4.00	1.90	4.00	1.81	4.00
3/4	11.2	88.9	4	22.4	3/4	114.3	108.0	114.3	2.72	6.00	2.27	5.00	2.27	5.00	2.72	6.00	2.81	6.20
1	12.7	101.6	4	25.4	7/8	127.0	120.7	127.0	3.86	8.50	3.40	7.50	3.40	7.50	4.08	9.00	3.61	8.00
1 1/4	14.2	111.3	4	25.4	7/8	127.0	120.7	127.0	4.54	10.00	4.10	9.00	4.09	10.80	4.30	9.50	4.99	11.00
1 1/2	15.7	124.0	4	28.4	1	139.7	133.4	139.7	5.90	13.00	5.45	12.00	5.40	11.90	5.90	13.00	6.76	14.90
2	17.5	165.1	8	25.4	7/8	146.1	139.7	146.1	10.89	24.00	10.50	23.00	9.53	21.00	11.30	25.00	10.89	24.00
2 1/2	19.1	190.5	8	28.4	1	158.8	152.4	158.8	16.34	36.00	15.80	34.80	13.15	29.00	16.00	35.30	16.34	36.00
3	20.6	203.2	8	31.8	1 1/8	177.8	171.5	177.8	21.79	48.00	21.77	48.00	17.24	38.00	21.79	48.00		
4	23.9	241.3	8	35.1	1 1/4	196.9	190.5	196.9	31.30	69.00	31.00	68.40	29.00	63.90	33.11	73.00		
5	23.9	292.1	8	41.1	1 1/2	247.7	241.3	247.7	59.02	130.00	58.80	129.60	54.00	119.00	60.00	132.30		
6	26.9	317.5	12	38.1	1 3/8	260.4	254.0	266.7	74.91	165.00	74.00	163.00	62.00	136.70	75.00	165.30		
8	31.8	393.7	12	44.5	1 5/8	292.1	285.8	323.9	123.83	273.00	117.73	258.00	129.73	236.00	136.98	302.00		
10	33.3	482.6	12	50.8	1 7/8	336.6	330.2	342.9	205.93	454.00	197.49	435.40	220.19	485.40	229.97	507.00		
12	39.6	571.5	16	53.8	2	374.7	368.3	387.4	306.00	674.60	264.00	582.00	286.02	630.60	316.00	696.70		
14	41.4	635.0	16	60.5	2 1/4	406.4	400.1	425.5	416.00	917.00	-	-	404.06	890.80	421.00	928.00		
16	44.5	704.9	16	66.5	2 1/2	444.5	438.2	469.9	567.50	1250.00	-	-	522.10	1151.00	559.00	1232.70		
18	49.3	774.7	16	73.2	2 3/4	495.3	489.0	527.1	736.00	1622.60	-	-	669.65	1476.30	761.00	1677.70		
20	54.1	831.9	16	79.2	3	539.8	533.4	565.2	929.00	2048.00	-	-	805.85	1776.60	967.00	2131.80		
24	63.5	990.6	16	91.9	3 1/2	616.0	609.6	647.7	1504.00	3315.70	-	-	1285.55	2834.00	1568.00	3456.80		

(4) Blind Flanges may be made with the same hub as that used for Slip-on Flanges or without hub.
(5) The gasket surface and backside (bearing surface for bolting) are made parallel within 1 degree. To accomplish parallelism, and facing is carried out according to MSS SP-9, without reducing thickness (t).
(6) Dimensions of sizes 1/2" through 2 1/2" are the same as for class 900 Flanges.
(7) Depth of Socket (Y) is covered by ANSI B16.5 only in sizes through 3 inch, over 3 inch is at the manufacturer's option.

CLASS 2500 FLANGES

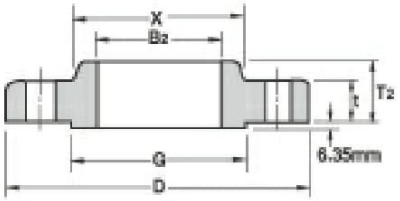

SLIP - ON

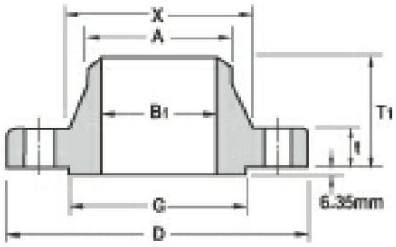

WELDING NECK

ANSI B16.5 FORGED FLANGES

Unit : mm

Nominal Pipe Size	Outside Diam.	Diam. at Base of Hub	O.D.of Raised Face	Thick-ness	Bore				Length thru Hub			Diam.of Hub at Bevel	Radius of Fillet	Thread Length
					Welding Neck	Slip-on	Lap Joint	Counter Bore Min.	Welding Neck	Slip-on and Threaded	Lap Joint			
	D	X	G	t	B_1	B_2	B_3	B	T_1	T_2	T_3	A	R	Q
1/2	133	42.9	35.1	30.2	To be specified by purchaser.	22.4	22.9	23.6	73.2	39.6	39.6	21.3	3.0	28.4
3/4	140	50.8	42.9	31.8		27.7	28.2	29.0	79.2	42.9	42.9	26.7	3.0	31.8
1	159	57.2	50.8	35.1		34.5	35.1	35.8	88.9	47.8	47.8	33.5	3.0	35.1
1 1/4	184	73.2	63.5	38.1		43.2	43.7	44.5	95.3	52.3	52.3	42.2	4.8	38.1
1 1/2	203	79.2	73.2	44.5		49.5	50.0	50.5	111.3	60.5	60.5	48.3	6.4	44.5
2	235	95.3	91.9	50.8		62.0	62.5	63.5	127.0	69.9	69.9	60.5	7.9	50.8
2 1/2	267	114.3	104.6	57.2		74.7	75.4	76.2	142.7	79.2	79.2	73.2	7.9	57.2
3	305	133.4	127.0	66.5		90.7	91.4	92.2	168.1	91.9	91.9	88.9	9.7	63.5
4	356	165.1	157.2	76.2		116.1	116.8	117.6	190.5	108.0	108.0	114.3	11.2	69.9
5	419	203.2	185.7	91.9		143.8	144.5	144.5	228.6	130.0	130.0	141.2	11.2	76.2
6	483	235.0	215.9	108.0		170.7	171.5	171.5	273.1	152.4	152.4	168.4	12.7	82.6
8	552	304.8	269.7	127.0		221.5	222.3	222.3	317.5	177.8	177.8	219.2	12.7	95.3
10	673	374.7	323.9	165.1		276.4	277.4	276.4	419.1	228.6	228.6	273.1	12.7	108.0
12	762	441.5	381.0	184.2		327.2	328.2	328.7	463.6	254.0	254.0	323.9	12.7	120.7

Notes:

(1) For the inside diameter of pipes (corresponding to 'Bore' (B_1) of Welding Neck Flanges), refer to page 92.

(2) Class 2500 flanges except Lap Joint will be furnished with 0.25"(6.35mm) raised face, which is not included in "Thickness" (t) and "Length through Hub" (T_1), (T_2).

(3) For Slip-on, Threaded and Lap Joint Flanges, the hubs can be shaped either vertican from base to top or tapered within the limits of 7 degrees.

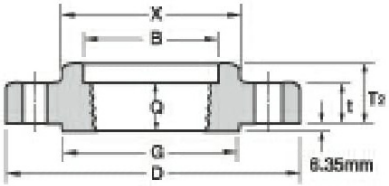

THREADED

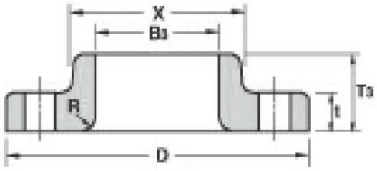

LAP JOINT

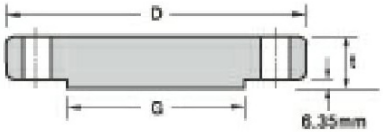

BLIND

Unit : mm

Nominal Pipe Size	Drilling			Bolting				Approximate Weight							
				Stud Bolt Length											
	Bolt Circle Diam.	Number of Holes	Diam. of Holes	Diam. of Bolts (inch)	0.25" Raised Face	Male-Female Tongue-Groove	Ring Joint	Welding Neck		Slip-on and Threaded		Lap Joint		Blind	
								Kg	lb	Kg	lb	Kg	lb	Kg	lb
1/2	88.9	4	22.4	3/4	120.7	114.3	120.7	3.18	7.00	3.18	7.00	3.00	6.60	3.18	7.00
3/4	95.3	4	22.4	3/4	127.0	120.7	127.0	4.08	9.00	4.08	9.00	3.63	8.00	4.54	10.00
1	108.0	4	25.4	7/8	139.7	133.4	139.7	5.45	12.00	5.44	12.00	4.99	11.00	5.44	12.00
1 1/4	130.0	4	28.4	1	152.4	146.1	152.4	9.07	20.00	8.16	18.00	7.26	16.00	8.16	18.00
1 1/2	146.1	4	31.8	1 1/8	171.5	165.1	171.5	11.35	25.00	11.00	24.30	9.99	22.00	10.44	23.00
2	171.5	8	28.4	1	177.8	171.5	177.8	19.07	42.00	17.25	38.00	16.80	37.00	17.71	39.00
2 1/2	196.9	8	31.8	1 1/8	196.9	190.5	203.2	23.61	52.00	24.97	55.00	24.06	53.00	25.42	56.00
3	228.6	8	35.1	1 1/4	222.3	215.9	228.6	42.68	94.00	37.68	83.00	36.32	80.00	39.04	86.00
4	273.1	8	41.1	1 1/2	254.0	247.7	260.4	64.00	141.00	58.00	127.90	54.48	120.00	60.38	133.00
5	323.9	8	47.8	1 3/4	298.5	292.1	311.2	110.68	244.00	96.25	210.00	92.53	204.00	101.15	223.00
6	368.3	8	53.8	2	342.9	336.6	355.6	176.46	378.00	146.51	323.00	143.01	315.30	156.63	345.30
8	438.2	12	53.8	2	381.0	374.7	393.7	261.27	576.00	219.99	485.00	213.38	470.40	240.62	530.50
10	539.8	12	66.5	2 1/2	489.0	482.6	508.0	484.43	1068.00	419.57	925.00	408.60	900.80	465.36	1026.00
12	619.3	12	73.2	2 3/4	539.8	533.4	558.8	692.35	1526.30	590.20	1301.00	572.95	1263.00	644.06	1464.00

(4) Blind Flanges may be made with the same hub as that used for Slip-on Flanges or without hub.
(5) The gasket surface and backside (bearing surface for bolting) are made parallel within 1 degree. To accomplish parallelism, spot facing is carried out according to MSS SP-9, without reducing thickness (t).
(6) Class 2500 Slip-On Flanges are not covered by ANSI B16.5, slip-on flanges are at the manufacturer's option.

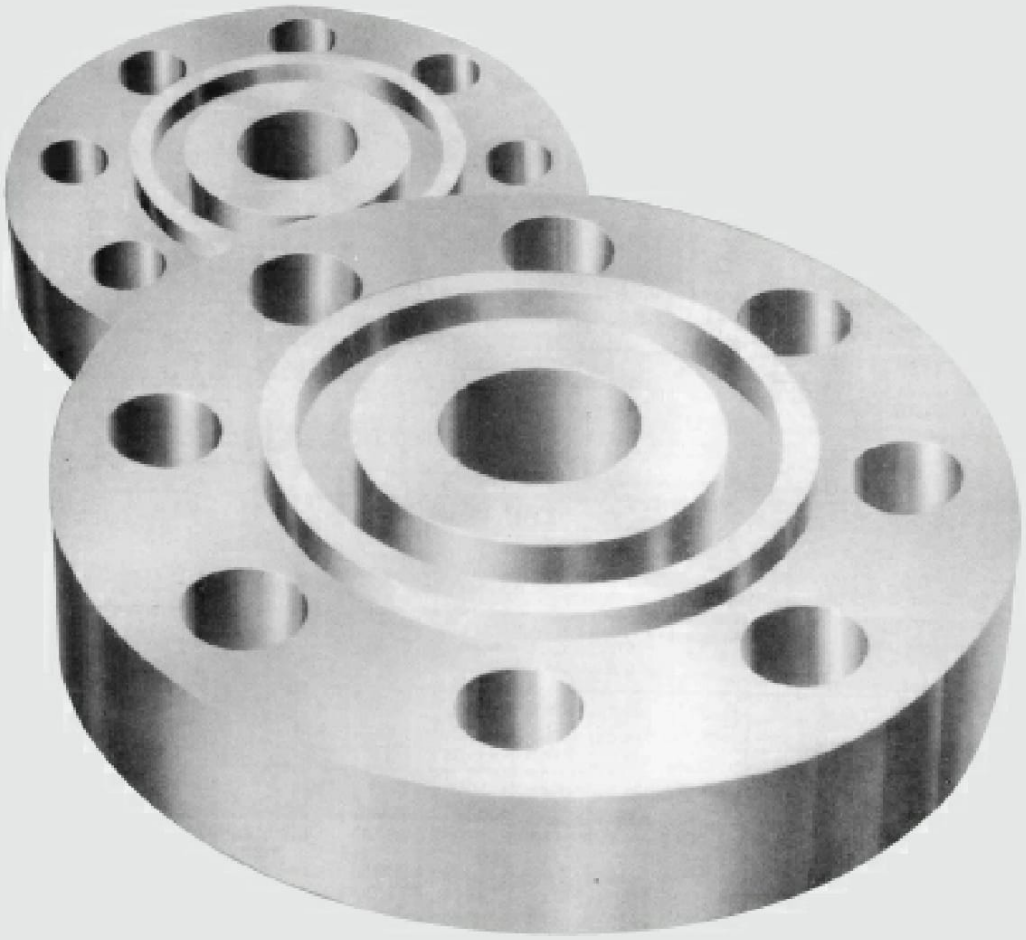

RING JOINT FLANGES

- Class 150 Flanges
- Class 300, 400, 600 Flanges
- Class 900 Flanges
- Class 1500 Flanges
- Class 2500 Flanges

CLASS 150 FLANGES

RING JOINT FLANGES FACING DIMENSIONS

WELDING NECK

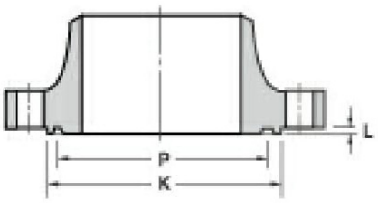

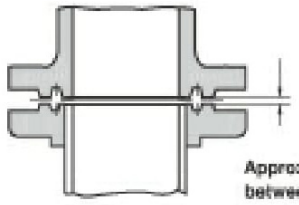

SLIP - ON

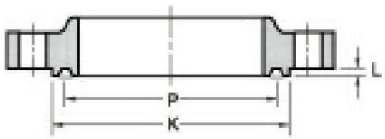

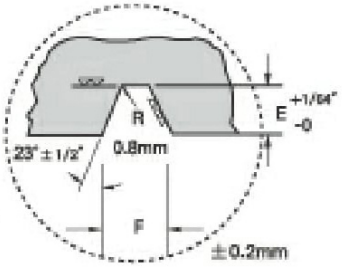

THREADED

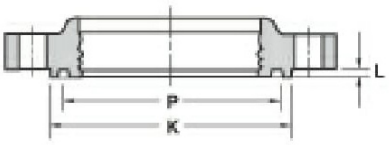

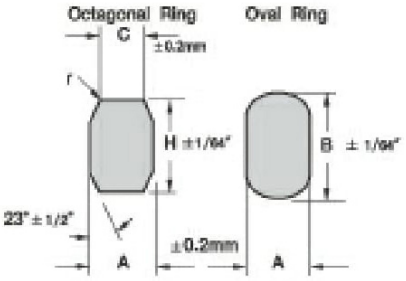

ANSI B16.5 FORGED FLANGES

Unit : mm

Nominal Pipe Size	Pitch Diam.of Ring and Groove	Width of Ring	Height of Ring		Width of Flat on Octagonal Rings	Width of Groove	Depth of Groove	Diameter of Raised Face for Ring Joint or Lapped	Ring Number of Gasket	Approximate Distance Between Flanges of Ring Joints When Ring is Compressed
			Oval	Octagonal						
	P	A	B	H	C	F	E(L*)	K(Min)		
1	47.6	8.0	14.3	12.7	5.2	8.7	6.4	63.5	R15	4.1
1 1/4	57.2	8.0	14.3	12.7	5.2	8.7	6.4	73.2	R17	4.1
1 1/2	65.1	8.0	14.3	12.7	5.2	8.7	6.4	82.6	R19	4.1
2	82.6	8.0	14.3	12.7	5.2	8.7	6.4	101.6	R22	4.1
2 1/2	101.6	8.0	14.3	12.7	5.2	8.7	6.4	120.7	R25	4.1
3	114.3	8.0	14.3	12.7	5.2	8.7	6.4	133.4	R29	4.1
3 1/2	131.8	8.0	14.3	12.7	5.2	8.7	6.4	153.9	R33	4.1
4	149.2	8.0	14.3	12.7	5.2	8.7	6.4	171.5	R36	4.1
5	171.5	8.0	14.3	12.7	5.2	8.7	6.4	193.5	R40	4.1
6	193.7	8.0	14.3	12.7	5.2	8.7	6.4	218.9	R43	4.1
8	247.7	8.0	14.3	12.7	5.2	8.7	6.4	273.1	R48	4.1
10	304.8	8.0	14.3	12.7	5.2	8.7	6.4	330.2	R52	4.1
12	381.0	8.0	14.3	12.7	5.2	8.7	6.4	406.4	R56	4.1
14	396.9	8.0	14.3	12.7	5.2	8.7	6.4	425.5	R59	3.0
16	454.0	8.0	14.3	12.7	5.2	8.7	6.4	482.6	R64	3.0
18	517.5	8.0	14.3	12.7	5.2	8.7	6.4	546.1	R68	3.0
20	558.8	8.0	14.3	12.7	5.2	8.7	6.4	596.9	R72	3.0
24	673.1	8.0	14.3	12.7	5.2	8.7	6.4	711.2	R76	3.0

Notes:

Unless otherwise specified by the customer, Ring type Joint Flanges will be furnished in accordance with these details.
The depth of groove is added to the minimum flange thickness.
*Raised face "L" is equal to groove dimension "E", but is not subject to tolerances for "E".
*A plus tolerance of 3/64 in. for heights B and H is permited providing the variation in the height of any given ring does not exceed 1/64 in. throughout its entire circumference.
Dimension "R" is max.
Radius "r" is 1/16" for ring widths 7/8" and less, 3/32" for ring widths 1"(25.4mm) and over.

CLASS 300-400-600 FLANGES

RING JOINT FLANGES FACING DIMENSIONS

WELDING NECK

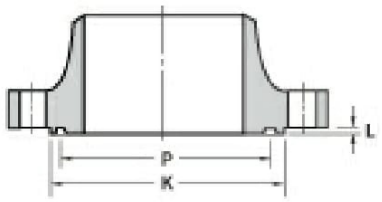

SLIP - ON

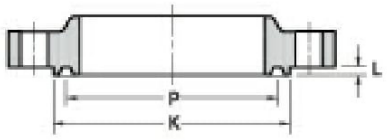

THREADED

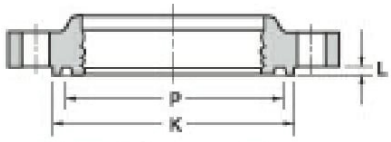

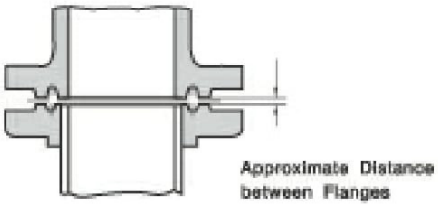

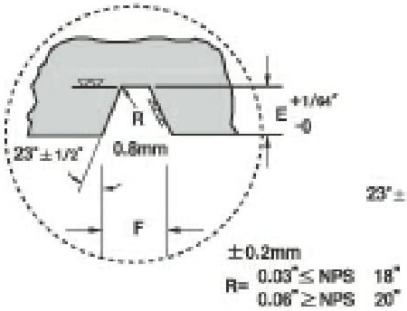

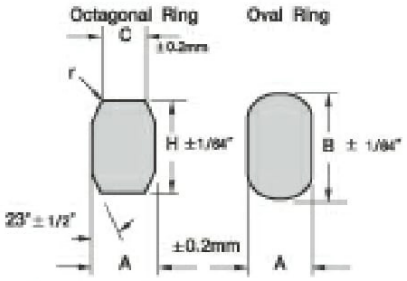

ANSI B16.5 FORGED FLANGES

Unit : mm

Nominal Pipe Size	Pitch Diam.of Ring and Groove	Width of Ring	Height of Ring		Width of Flat on Octagonal Rings	Width of Groove	Depth of Groove	Diameter of Raised Face for Ring Joint or Lapped	Ring Number of Gasket	Approximate Distance Between Flanges of Ring Joints When Ring is Compressed		
			Oval	Octagonal								
	P	A	B	H	C	F	E(L*)	K(Min)		Class 300	Class 400	Class 600
1/2	34.1	6.4	11.1	9.5	4.3	7.1	5.6	50.8	R11	3.0	–	3.0
3/4	42.9	8.0	14.3	12.7	5.2	8.7	6.4	63.5	R13	4.1	–	4.1
1	50.8	8.0	14.3	12.7	5.2	8.7	6.4	69.9	R16	4.1	–	4.1
1 1/4	60.3	8.0	14.3	12.7	5.2	8.7	6.4	79.5	R18	4.1	–	4.1
1 1/2	68.3	8.0	14.3	12.7	5.2	8.7	6.4	90.4	R20	4.1	–	4.1
2	82.6	11.1	17.5	15.9	7.7	11.9	7.9	108.0	R23	5.6	–	4.8
2 1/2	101.6	11.1	17.5	15.9	7.7	11.9	7.9	127.0	R26	5.6	–	4.8
3	123.8	11.1	17.5	15.9	7.7	11.9	7.9	146.1	R31	5.6	–	4.8
3 1/2	131.8	11.1	17.5	15.9	7.7	11.9	7.9	158.8	R34	5.6	–	4.8
4	149.2	11.1	17.5	15.9	7.7	11.9	7.9	174.8	R37	5.6	5.6	4.8
5	181.0	11.1	17.5	15.9	7.7	11.9	7.9	209.6	R41	5.6	5.6	4.8
6	211.2	11.1	17.5	15.9	7.7	11.9	7.9	241.3	R45	5.6	5.6	4.8
8	269.9	11.1	17.5	15.9	7.7	11.9	7.9	301.8	R49	5.6	5.6	4.8
10	323.9	11.1	17.5	15.9	7.7	11.9	7.9	355.6	R53	5.6	5.6	4.8
12	381.0	11.1	17.5	15.9	7.7	11.9	7.9	412.8	R57	5.6	5.6	4.8
14	419.1	11.1	17.5	15.9	7.7	11.9	7.9	457.2	R61	5.6	5.6	4.8
16	469.9	11.1	17.5	15.9	7.7	11.9	7.9	508.0	R65	5.6	5.6	4.8
18	533.4	11.1	17.5	15.9	7.7	11.9	7.9	574.8	R69	5.6	5.6	4.8
20	584.2	12.7	19.1	17.5	8.7	13.5	9.5	635.0	R73	5.6	5.6	4.8
24	692.2	15.9	22.2	20.7	10.5	16.7	11.1	749.3	R77	6.4	6.4	5.6

Notes:

Unless otherwise specified by the customer, Ring type Joint Flanges will be furnished in accordance with these details.

The depth of groove is added to the minimum flange thickness.

*Raised face "L" is equal to groove dimension "E", but is not subject to tolerances for "E".

*A plus tolerance of 3/64 in. for heights B and H is permited providing the variation in the height of any given ring does not exceed 1/64 in. throughout its entire circumference.

Dimension "R" is max.

Radius "r" is 3/16" for ring widths 7/8" and less, 3/32" for ring widths 1" (25.4mm) and over.

CLASS 900 FLANGES

RING JOINT FLANGES FACING DIMENSIONS

WELDING NECK

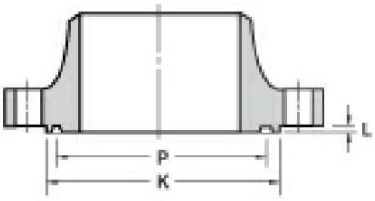

SLIP - ON

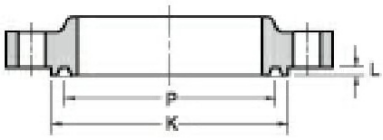

THREADED

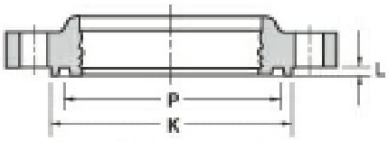

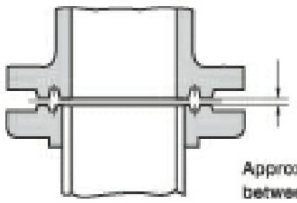

Approximate Distance between Flanges

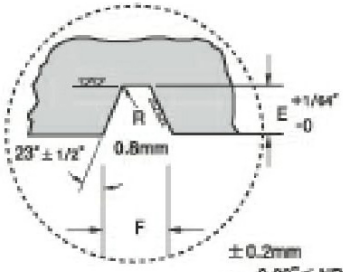

±0.2mm

R= 0.03"≤ NPS 12"
0.06"≥ NPS 14"-20"
0.09"= NPS 24"

Octagonal Ring

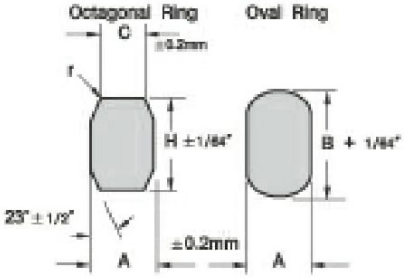

Oval Ring

ANSI B16.5 FORGED FLANGES

Unit : mm

Nominal Pipe Size	Pitch Diam.of Ring and Groove	Width of Ring	Height of Ring		Width of Flat on Octagonal Rings	Width of Groove	Depth of Groove	Diameter of Raised Face for Ring Joint or Lapped	Ring Number of Gasket	Approximate Distance Between Flanges of Ring Joints When Ring is Compressed
			Oval	Octagonal						
	P	A	B	H	C	F	E(L*)	K(Min)		
For size 2 1/2" and smaller,use Class 1500 Ring Joint Flanges										
3	123.8	11.1	17.5	15.9	7.7	11.9	7.9	155.4	R31	4.1
4	149.2	11.1	17.5	15.9	7.7	11.9	7.9	180.8	R37	4.1
5	181.0	11.1	17.5	15.9	7.7	11.9	7.9	215.9	R41	4.1
6	211.2	11.1	17.5	15.9	7.7	11.9	7.9	241.3	R45	4.1
8	269.9	11.1	17.5	15.9	7.7	11.9	7.9	307.8	R49	4.1
10	323.9	11.1	17.5	15.9	7.7	11.9	7.9	362.0	R53	4.1
12	381.0	11.1	17.5	15.9	7.7	11.9	7.9	419.1	R57	4.1
14	419.1	15.9	22.2	20.7	10.5	16.7	11.1	466.9	R62	4.1
16	469.9	15.9	22.2	20.7	10.5	16.7	11.1	523.7	R66	4.1
18	533.4	19.1	25.4	23.8	11.1	19.8	12.7	593.9	R70	4.8
20	584.2	19.1	25.4	23.8	12.3	19.8	12.7	647.7	R74	4.8
24	692.2	25.4	33.4	31.8	17.3	27.0	15.9	771.7	R78	5.6

Notes:

Unless otherwise specified by the customer, Ring type Joint Flanges will be furnished in accordance with these details.
The depth of groove is added to the minimum flange thickness.
*Raised face "L" is equal to groove dimension "E", but is not subject to tolerances for "E".
*A plus tolerance of 3/64 in. for heights B and H is permited providing the variation in the height of any given ring does not exceed 1/64 in. throughout its entire circumference.
Dimension "R" is max.
Radius "r" is 1/16" for ring widths 7/8" and less, 3/32" for ring widths 1" (25.4mm) and over.

CLASS 1500 FLANGES

RING JOINT FLANGES FACING DIMENSIONS

WELDING NECK

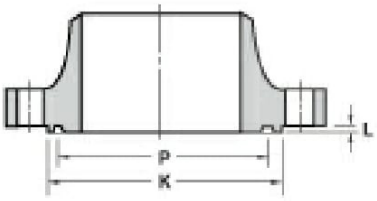

SLIP - ON

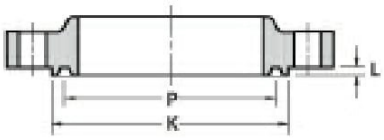

THREADED

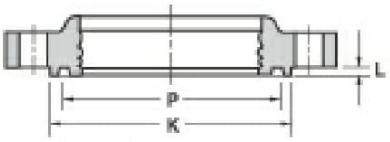

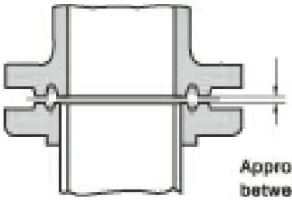

Approximate Distance between Flanges

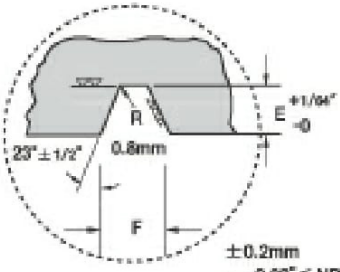

±0.2mm

R= 0.03" ≤ NPS 5"
0.06" ≥ NPS 6"-12"
0.09" = NPS 14"

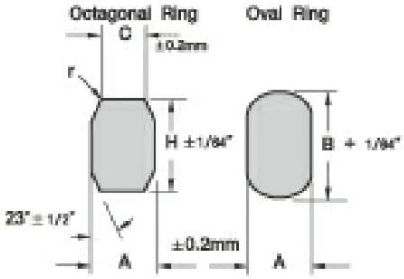

ANSI B16.5 FORGED FLANGES

Unit : mm

Nominal Pipe Size	Pitch Diam.of Ring and Groove	Width of Ring	Height of Ring		Width of Rat on Octagonal Rings	Width of Groove	Depth of Groove	Diameter of Raised Face for Ring Joint or Lapped	Ring Number of Gasket	Approximate Distance Between Flanges of Ring Joints When Ring is Compressed
			Oval	Octagonal						
	P	A	B	H	C	F	E(L*)	K(Min)		
1/2	39.7	8.0	14.3	12.7	5.2	8.7	6.4	60.5	R12	4.1
3/4	44.5	8.0	14.3	12.7	5.2	8.7	6.4	66.8	R14	4.1
1	50.8	8.0	14.3	12.7	5.2	8.7	6.4	71.4	R16	4.1
1 1/4	60.3	8.0	14.3	12.7	5.2	8.7	6.4	81.0	R18	4.1
1 1/2	68.3	8.0	14.3	12.7	5.2	8.7	6.4	92.2	R20	4.1
2	95.3	11.1	17.5	15.9	7.7	11.9	7.9	124.0	R24	3.0
2 1/2	108.0	11.1	17.5	15.9	7.7	11.9	7.9	136.7	R27	3.0
3	136.5	11.1	17.5	15.9	7.7	11.9	7.9	168.4	R35	3.0
4	161.9	11.1	17.5	15.9	7.7	11.9	7.9	193.8	R39	3.0
5	193.7	11.1	17.5	15.9	7.7	11.9	7.9	228.6	R44	3.0
6	211.2	12.7	19.1	17.5	8.7	13.5	9.5	247.7	R46	3.0
8	269.9	15.9	22.2	20.7	10.5	16.7	11.1	317.5	R50	4.1
10	323.9	15.9	22.2	20.7	10.5	16.7	11.1	371.6	R54	4.1
12	381.0	22.2	28.6	27.0	14.8	23.0	14.3	438.2	R58	4.8
14	419.1	25.4	33.4	31.8	17.3	27.0	15.9	489.0	R63	5.6
16	469.9	28.6	36.5	34.9	19.8	30.2	17.5	546.1	R67	7.9
18	533.4	28.6	36.5	34.9	19.8	30.2	17.5	612.9	R71	7.9
20	584.2	31.8	39.7	38.1	22.3	33.4	17.5	673.1	R75	9.7
24	692.2	34.9	44.5	41.3	24.8	36.5	20.6	793.8	R79	11.2

Notes:

Unless otherwise specified by the customer, Ring type Joint Flanges will be furnished in accordance with these details.
The depth of groove is added to the minimum flange thickness.
*Raised face "L" is equal to groove dimension "E", but is not subject to tolerances for "E".
*A plus tolerance of 3/64 in. for heights B and H is permited providing the variation in the height of any given ring does not exceed 1/64 in. throughout its entire circumference.
Dimension "R" is max.
Radius "r" is 3/16" for ring widths 7/8" and less, 3/32" for ring widths 1" (25.4mm) and over.

CLASS 2500 FLANGES

RING JOINT FLANGES FACING DIMENSIONS

WELDING NECK

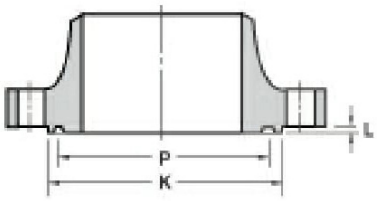

SLIP - ON

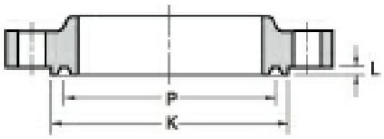

THREADED

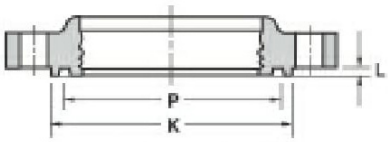

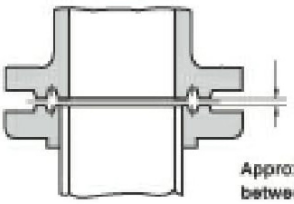

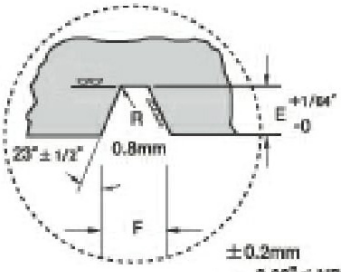

±0.2mm

R= 0.03" ≤ NPS 2"
0.06" ≥ NPS 2 1/2"-8"
0.09" = NPS 10"

Octagonal Ring Oval Ring

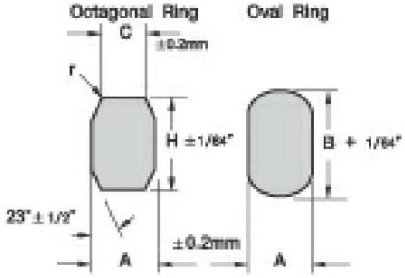

ANSI B16.5 FORGED FLANGES

Unit : mm

Nominal Pipe Size	Pitch Diam.of Ring and Groove	Width of Ring	Height of Ring		Width of Flat on Octagonal Rings	Width of Groove	Depth of Groove	Diameter of Raised Face for Ring Joint or Lapped	Ring Number of Gasket	Approximate Distance Between Flanges of Ring Joints When Ring is Compressed
			Oval	Octagonal						
	P	A	B	H	C	F	E(L*)	K(Min)		
1/2	42.9	8.0	14.3	12.7	5.2	8.7	6.4	65.0	R13	4.1
3/4	50.8	8.0	14.3	12.7	5.2	8.7	6.4	73.2	R16	4.1
1	60.3	8.0	14.3	12.7	5.2	8.7	6.4	82.6	R18	4.1
1 1/4	72.2	11.1	17.5	15.9	7.7	11.9	7.9	101.6	R21	3.0
1 1/2	82.6	11.1	17.5	15.9	7.7	11.9	7.9	114.3	R23	3.0
2	101.6	11.1	17.5	15.9	7.7	11.9	7.9	133.4	R26	3.0
2 1/2	111.1	12.7	19.1	17.5	8.7	13.5	9.5	149.4	R28	3.0
3	127.0	12.7	19.1	17.5	8.7	13.5	9.5	168.4	R32	3.0
4	157.2	15.9	22.2	20.7	10.5	16.7	11.1	203.2	R38	4.1
5	190.5	19.1	25.4	23.8	12.3	19.8	12.7	241.3	R42	4.1
6	228.6	19.1	25.4	23.8	12.3	19.8	12.7	279.4	R47	4.1
8	279.4	22.2	28.6	27.0	14.8	23.0	14.3	339.9	R51	4.8
10	342.9	28.6	36.5	34.9	19.8	30.2	17.5	425.5	R55	6.4
12	406.4	31.8	39.7	38.1	22.3	33.4	17.5	495.3	R60	7.9

Notes:
Unless otherwise specified by the customer, Ring type Joint Flanges will be furnished in accordance with these details.
The depth of groove is added to the minimum flange thickness.
*Raised face "L" is equal to groove dimension "E", but is not subject to tolerances for "E".
*A plus tolerance of 3/64 in. for heights B and H is permited providing the variation in the height of any given ring does not exceed 1/64 in. throughout its entire circumference.
Dimension "R" is max.
Radius "r" is 3/16" for ring widths 7/8" and less, 3/32" for ring widths 1" (25.4mm) and over.

REDUCINE FLANGES

THREADED AND SLIP-ON TYPES

HUB – For hub diameter (×)and height of hub above the back of the flange (N) refer to the list of standard flange specification of the same type and pressure and use the dimensions of a flange one nominal pipe size smaller than the nominal pipe size from which the reduction is being made.

FLANGE O.D., DRILLING TEMPLATE AND THICKNESS – Outside diameter, drilling template and flange thickness Q(see note on FACINGS)agree with the dimensions of a standard flange of the nominal pipe size from which the reduction is being made.

FACING – Facing dimensions also agree with the dimensions of a standard flange of the nominal pipe size from which the reduction is being made.
150 lbs and 300 lbs forged steel Threaded, Slip-on, Welding Neck and Blind flanges are furnished with American Standard 1/16″ (1.6mm) raised face which is included in flange thickness(Q), 400lbs, 900lbs, 1500lbs, 2500lbs flanges are supplied with American Standard 1/4″ (6.4mm)raised face which is not included in flange thickess(Q).

BORE OR TAPPING – The bore or tapping is machined to accept a pipe of the nominal pipe size to which the reduction is being made. For reduction to sizes smaller than shown, Blind flanges are tapped or bored to specified nominal pipe size.

EXAMPLE:

A 300 lbs threaded flange used in reducing from a 6″ (152.4mm) to 3″ (76.2mm) nominal pipe size should be specified as a 3″ (76.2mm)×12 1/2″ (317.5mm)– 300lbs Threded Reducing Flange. It would have the folowing dimensional characteristics:

Diameter of Hub (×)–7″ (177.8mm)
Height of Hub (N)–5/8″ (15.87mm)

Hub dimensions are those of a 5″ (127.0mm), 300lbs Standard flange.
Outside Diameter – 12 1/2″ (317.5mm)
Thickness(Q) – 1 7/16″ (36.5mm)
Raised face – 1/16″ (1.6mm)
O.D.,Flange Thickness Q., Raised Face and Drilling Template are those of a 6″ (152.4mm), 300 lbs Standard flange.
Tapping – 3″ (76.2mm)I.P.S.
Flange is tapped to the nominal pipe size to which reduction is being made.

WELDING NECK TYPES

On Reducing Welding Neck Flanges, which are made only on special order, the hub dimensions agree with the hub dimensions of standard flanges of the size to which reduction is being made. Other flange dimensions, including the drilling template, agree with the standard dimensions of the size from which the reductoin is being made.

REDUCING FLANGES

THREADED / SLIP - ON / WELDING NECK

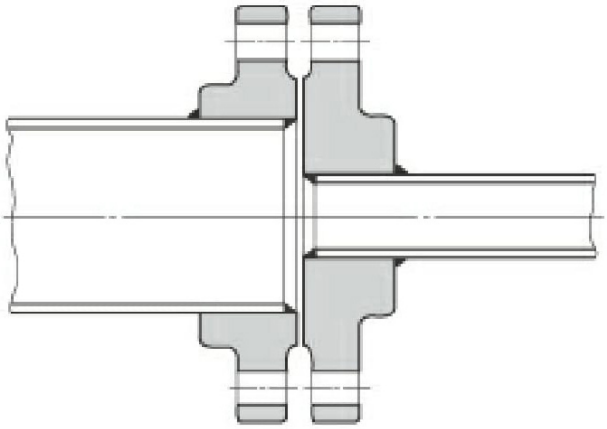

In ordering Reducing Flanges: Specify(1) nominal pipe size of the tapping or bore to which the reduction is being made, (2) the outside diameter of te flange from whicih the reduction is being made and (3) pressure rating.

EXAMPLE:

A 300 lbs Reducing Flange for reducing from a6" (152.4mm) to a3" (76.2mm) nominal pipe size should be designated as a 3" (76.2mm) × 12 1/2" (317.5mm) 300 lbs Reducing Flange. Whether Threaded Slip-On or Welding Neck type is desired must also to be specified.

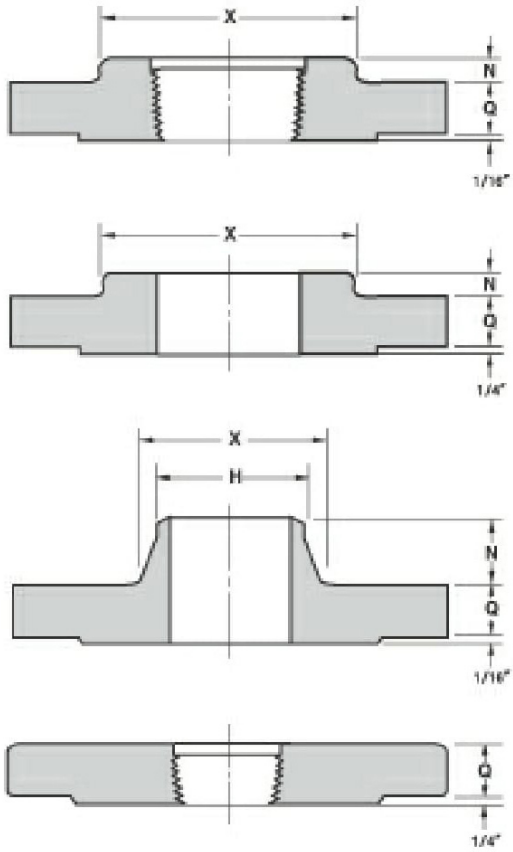

ANSI B16.5 FORGED FLANGES

Dimensions in iches

	OUTSIDE DIAMETER OF FLANGE FROM WHICH REDUCTION IS BEING MADE								
	Nominal Pipe size	150 lbs Standard	300 lbs Standard	400 lbs Standard	600 lbs Standard	900 lbs Standard	1500 lbs Standard	2500 lbs Standard	Smallest Size Bore or Tapping Requiring Hub Flange
Nominal Pipe Size to Which Reduction is to be Specified by Purchaser	3/4	3 7/8	4 5/8	4 5/8	4 5/8	5 1/8	5 1/8	5 1/2	1/2
	1	4 1/4	4 7/8	4 7/8	4 7/8	5 7/8	5 7/8	6 1/4	1/2
	1 1/4	4 5/8	5 1/4	5 1/4	5 1/4	6 1/4	6 1/4	7 1/4	1/2
	1 1/2	5	6 1/8	6 1/8	6 1/8	7	7	8	1/2
	2	6	6 1/2	6 1/2	6 1/2	8 1/2	8 1/2	9 1/4	1
	2 1/2	7	7 1/2	7 1/2	7 1/2	9 5/8	9 5/8	10 1/2	1 1/4
	3	7 1/2	8 1/4	8 1/4	8 1/4	9 1/2	10 1/2	12	1 1/4
	3 1/2	8	9	9	9	–	–	–	1 1/2
	4	9 1/2	10	10	10 3/4	11 1/2	12 1/4	14	1 1/2
	5	10	11	11	13	13 3/4	14 3/4	16 1/2	1 1/2
	6	11	12 1/2	12 1/2	14	15	15 1/2	19	2 1/2
	8	13 1/2	15	15	16 1/2	18 1/2	19	21 3/4	3
	10	16	17 1/2	17 1/2	20	21 1/2	23	26 1/2	3 1/2
	12	19	20 1/2	20 1/2	22	24	26 1/2	30	3 1/2
	14	21	23	23	23 3/4	25 1/4	–	–	3 1/2
	16	23 1/2	25 1/2	25 1/2	27	27 3/4	–	–	4
	18	25	28	28	29 1/4	31	–	–	4
	20	27 1/2	30 1/2	30 1/2	32	33 3/4	–	–	4
	24	32	36	36	37	41	–	–	4

Notes:

*For reductions to sizes smaller than shown, blind flanges are tapped or bored for specified nominal pipe size.

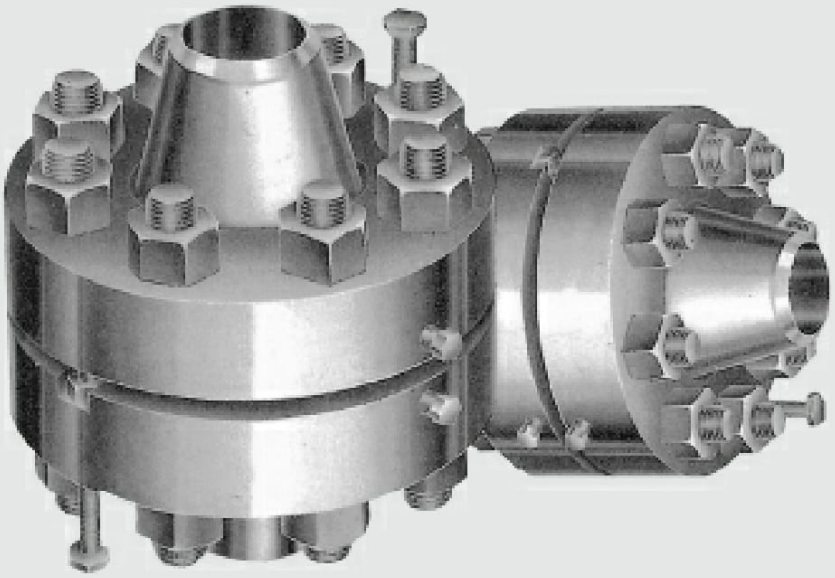

ORIFICE FLANGES

- ANSI Orifice Flanges
- Class 300 Orifice Flanges
- Class 400 Orifice Flanges
- Class 600 Orifice Flanges
- Class 900, 1500 Orifice Flanges
- Class 2500 Orifice Flanges

ANSI ORIFICE FLANGE

(ANSI B16.36) FORGED FLANGES

ORIFICE FLANGES are widely used in conjunction with orifice meters for measuring the rate of flow of liquids and gases. They are basically the same as standard welding neck, slip-on and screwed flanges except for the provision of radial, tapped holes in the flange ring for meter connections and additional bolts to act as jack screws to facilitate separating the flanges for inspection or replacement of the orifice plate.

NOTES:

1. JACK SCREW PROVISION

(1) Each flange shall have a machine bolt mounted in a hole drilled on the flange centerline at 90 deg. from the pressure taps for use as jack screw. Machine bolt shall be reqular, with one heavy hex. nut.
(2) A slot shall be provided in the flange 0.06in.(1.6mm)wider than the width across flats of the nut. The depth of the slot shall admit the nut so that there is no interference with the joining of the flanges when bolted together without orifice plate.

2. PRESSURE TAPS

(1) Each orifice flange is provided with two pressure tap holes extending radially from the outside diameter of the flange to the inside diameter of the flange.
(2) The 0.94 in.(23.9mm) locating dimension for raised face 0.75 in. (19.1mm) for ring joint shall be measured at the bore.
(3) Each pressure tap hole shall be equipped with a pipe plug.

3. FACING

The finish of facings shall be in accordance with MSS Standard Practice SP-6, Finishes for Contact Face of Connecting-End Flanges of Ferrous Valves and Fittings.

4. FLANGE THREADS

(1) Threaded flanges shall have an American National Standard taper pipe thread conforming to ANSI B2.1.
(2) The thread shall be concentric with the axis of the flange and variation in alignment shall not exceed 0.06in. (1.6mm) per foot.
(3) The flanges are made with counterbores at the back of the flange and the threads shall be chamfered to the diameter of the counterbore at an angle of approximately 45degrees with the axis of the thread to afford easy entrance in making a joint. The chamfer shall be concentric with the thread.
(4) In order to permit the pipe to be inserted to the face of the flange, the threads should have full root diameters through to the face of the flange, or shall have a counterbore at the face of the flange.
(5) The gaging notch fo the working gage shall come flush with the bottom of the chamfer in all threaded flanges and shall be considered as being the intersection of the chamfer come and the pitch come of the thread. This depth of chamfer is approximately equal to 1/2 of the pitch of the thread.
(6) The maximum allowable thread variation is one turn large or small from the gaging notch.

5. TOLERANCES

Tolerances on all dimensions shall be as shown in ANSI B16.5 except for those shown below.
(1) Tolerance on location of center of pressure tap hole from flange face shall be:
a. Flanges smaller than nominal size 4±0.02 in.(0.5mm)
b. Flanges nominal size 4 and larger ±0.03 in.(0.8mm)
(2) Bore diameter tolerance (welding neck flanges only)is ±0.5% of nominal value.

CLASS 300 ORIFICE FLANGES

WELDING NECK(RAISED FACE)

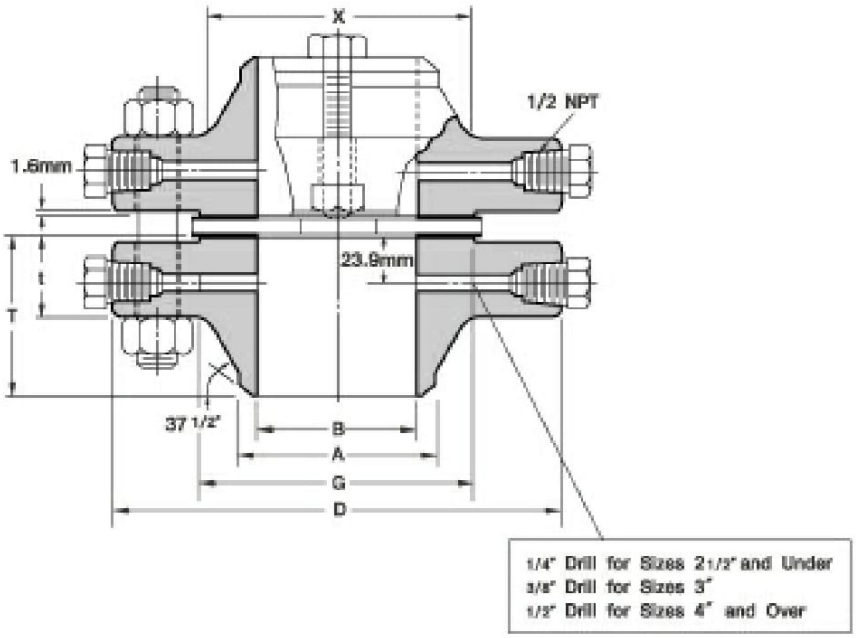

ANSI B16.36 FORGED FLANGES

Unit : mm

Nominal Pipe Size	Outside Diam.of Flange	Thickness of Flange(t)	Diam.of Hub at Base	Diam.of Raised Face	Diam.of Hub at Bevel	Length thru Hub(T)		Bore(B)	
						Welding Neck	Slip-on & Threaded	Welding Neck	Slip-on
	D	Raised Face	X	G	A	Raised Face	Raised Face		
1	124	38.1	53.8	50.8	33.5	82.6	47.8	26.7	34.5
1 1/4	133	38.1	63.5	63.5	42.2	84.1	46.0	35.1	43.2
1 1/2	155	38.1	69.9	73.2	48.3	85.9	47.8	40.9	49.5
2	165	38.1	84.1	91.9	60.5	85.9	49.3	52.6	62.0
2 1/2	191	38.1	100.1	104.6	73.2	88.9	50.8	62.7	74.7
3	210	38.1	117.3	127.0	88.9	88.9	52.3	78.0	90.7
4	254	38.1	146.1	157.2	114.3	91.9	53.8	102.4	116.1
5	279	38.1	177.8	185.7	141.2	101.6	53.8	128.3	143.8
6	318	38.1	206.2	215.9	168.4	100.1	53.8	154.2	170.7
8	381	41.1	260.4	269.7	219.2	111.3	62.0	202.7	221.5
10	445	47.8	320.5	323.9	273.1	117.3	66.5	254.5	276.4
12	521	50.8	374.7	381.0	323.9	130.0	73.2	304.8	327.2
14	584	53.8	425.5	412.8	355.6	142.7	76.2	336.6	359.2
16	648	57.2	482.6	469.9	406.4	146.1	82.6	387.4	410.5
18	711	60.5	533.4	533.4	457.2	158.8	88.9	438.2	461.8
20	775	63.5	587.2	584.2	508.0	162.1	95.3	489.0	513.1
24	914	69.9	701.5	692.2	609.6	168.1	106.4	590.6	616.0

Notes:

(1) For the 'Bore' (B) of Welding Neck Flanges other than Standard Wall Thickness, refer to page 92.

(2) Class 300 Welding Neck Flanges of sizes 24"(609.6mm) and smaller will be bored to match Standard Wall Pipe unless otherwise specified.

(3) Class 300 Orifice flanges will be furnished with 0.06"(1.6mm) raised face, which is included in 'Thickness of Flange' (t) and 'Length through Hub' (T)

(4) Bolt lengths for raised face flanges include allowance for orifice and gasket thickness of 0.25"(6.4mm) for sizes 4–12 and 0.38" (9.7mm) for sizes 14–24.

SLIP - ON

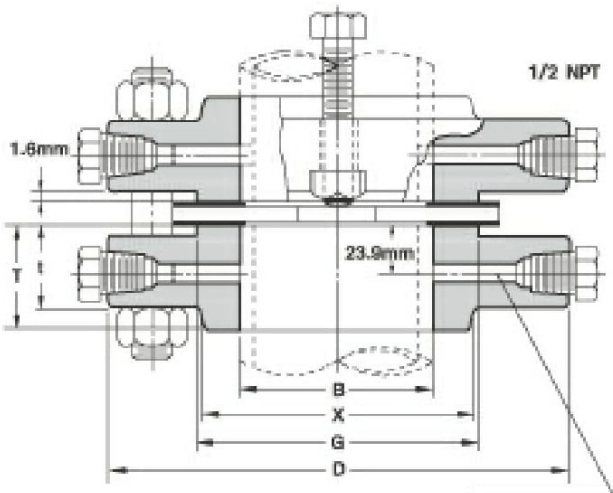

THREADED

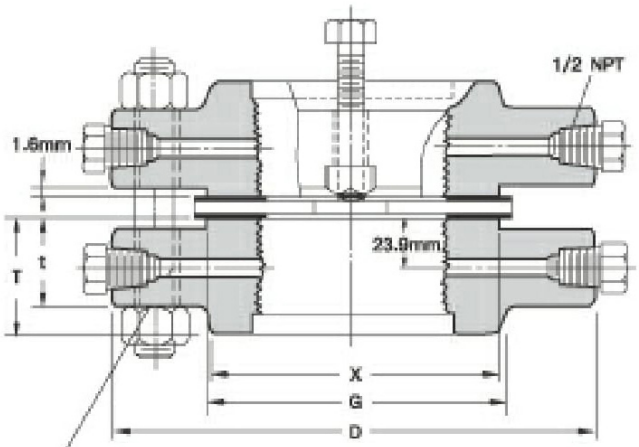

1/4" Drill for Sizes 2 1/2" and Under
3/8" Drill for Sizes 3"
1/2" Drill for Sizes 4" and Over

Unit : mm

Nominal Pipe Size	Pitch Diam.of Ring and Groove	Ring Number of Gasket	Depth of Jack Screw Slot	Jack Screw Size	Drilling Template				
			Raised Face	Raised Face	Diam.of Bolt Circle	Number of Bolts	Diam.of Stud Bolts(inch)	Diam.of Stud Holes	Length of Stud Bolts
	P								Raised Face
1	50.8	R16	9.7	Jack screw size for 1"thru 24"are those shown for length and diameter of bolts	88.9	4	5/8	17.5	139.7
1 1/4	60.3	R18	9.7		98.6	4	5/8	17.5	152.4
1 1/2	68.3	R20	12.7		114.3	4	3/4	20.6	152.4
2	82.6	R23	9.7		127.0	8	5/8	17.5	152.4
2 1/2	101.6	R26	12.7		149.4	8	3/4	20.6	152.4
3	123.8	R31	12.7		168.1	8	3/4	20.6	152.4
4	149.2	R37	12.7		200.2	8	3/4	20.6	152.4
5	181.0	R41	12.7		235.0	8	3/4	22.4	152.4
6	211.1	R45	12.7		269.7	12	3/4	22.4	152.4
8	269.9	R49	15.7		330.2	12	7/8	25.4	158.8
10	323.9	R53	19.1		387.4	16	1	28.4	165.1
12	381.0	R57	22.4		450.9	16	1 1/8	31.8	177.8
14	419.1	R61	22.4		514.4	20	1 1/8	31.8	184.2
16	469.9	R65	25.4		571.5	20	1 1/4	35.1	196.9
18	533.4	R69	25.4		628.7	24	1 1/4	35.1	203.2
20	584.2	R73	25.4		685.8	24	1 1/4	35.1	215.9
24	692.2	R77	31.8		812.8	24	1 1/2	41.1	241.3

(5) Unless otherwise specified, unions of 1"(25.4mm) thru 24"(609.6mm) furnished with carbon steel regular square headed bolts with semifinished American Standard heavy series hexagon nuts.

CLASS 400 ORIFICE FLANGES

WELDING NECK(RAISED FACE)

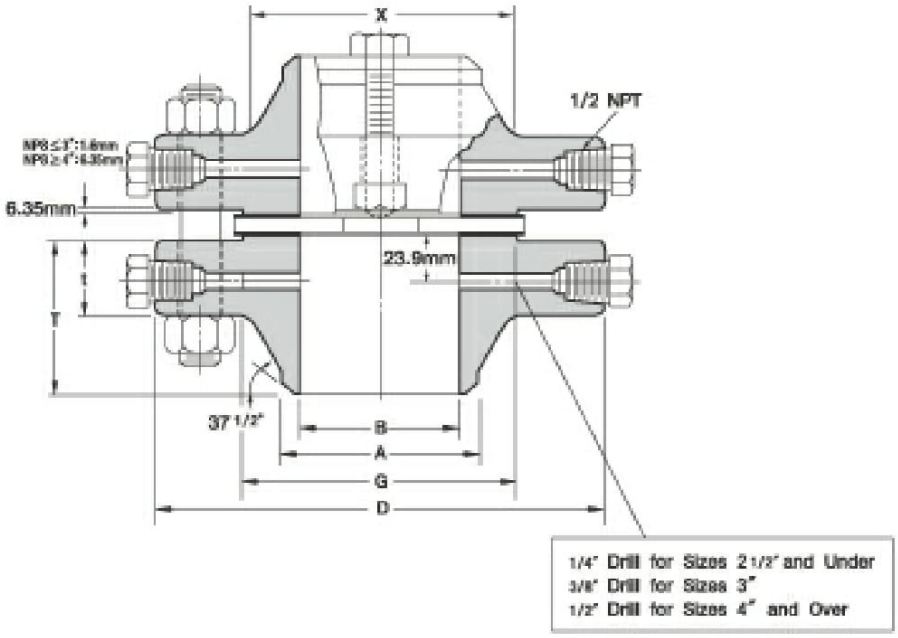

ANSI B16.36 FORGED FLANGES

Unit : mm

Nominal Pipe Size	Outside Diam.of Flange	Thickness of Flange(t)		Diam.of Hub at Base	Diam.of Raised Face	Diam.of Hub at Bevel	Length thru Hub(T)				Bore(B)	
							Welding Neck		Slip-on & Threaded		Welding Neck	Slip-on
	D	Raised Face	Ring Joint	X	G	A	Raised Face	Ring Joint	Raised Face	Ring Joint		
1	124	38.1	31.8	53.8	50.8	33.5	82.6	76.2	47.8	41.1	See Note(1) To be specified by purchaser	34.5
1 1/4	133	38.1	31.8	63.5	63.5	42.2	84.1	77.7	46.0	39.6		43.2
1 1/2	155	38.1	31.8	69.9	73.2	48.3	85.9	79.2	47.8	41.1		49.5
2	165	38.1	31.8	84.1	91.9	60.5	85.9	79.2	49.3	42.9		62.0
2 1/2	191	38.1	31.8	100.1	104.6	73.2	88.9	82.6	50.8	44.5		74.7
3	210	38.1	31.8	117.3	127.0	88.9	88.9	82.6	52.3	46.0		90.7
4	254	35.1	35.1	146.1	157.2	114.3	88.9	88.9	50.8	50.8		116.1
5	279	38.1	38.1	177.8	185.7	141.2	101.6	101.6	53.8	53.8		143.8
6	318	41.1	41.1	206.2	215.9	168.4	103.1	103.1	57.2	57.2		170.7
8	381	47.8	47.8	260.4	269.7	219.2	117.3	117.3	68.3	68.3		221.5
10	445	53.8	53.8	320.5	323.9	273.1	124.0	124.0	73.2	73.2		276.4
12	521	57.2	57.2	374.7	381.0	323.9	136.7	136.7	79.2	79.2		327.2
14	584	60.7	60.5	425.5	412.8	355.6	149.4	149.4				359.2
16	648	63.5	63.5	482.6	469.9	406.4	152.4	152.4				410.5
18	711	66.5	66.5	533.4	533.4	457.2	165.1	165.1				461.8
20	775	69.9	69.9	587.2	584.2	508.0	168.1	168.1				513.1
24	914	76.2	76.2	701.5	692.2	609.6	174.8	174.8				564.4

Notes:

(1) For inside diameter of pipes (corresponding to 'Bore' (B) of Welding Neck Flanges), refer to page 92.

(2) Class 400 Flanges of sizes 3"(76.2mm) and smaller with be furnished with 0.06"(1.6mm)raised face, which is included in 'Thickness of Flange' (t) and 'Length through Hub' (T)

(3) Each union includes two carbon steel jack screw bolts with hexagon nuts.

WELDING NECK(RING-TYPE JOINT)

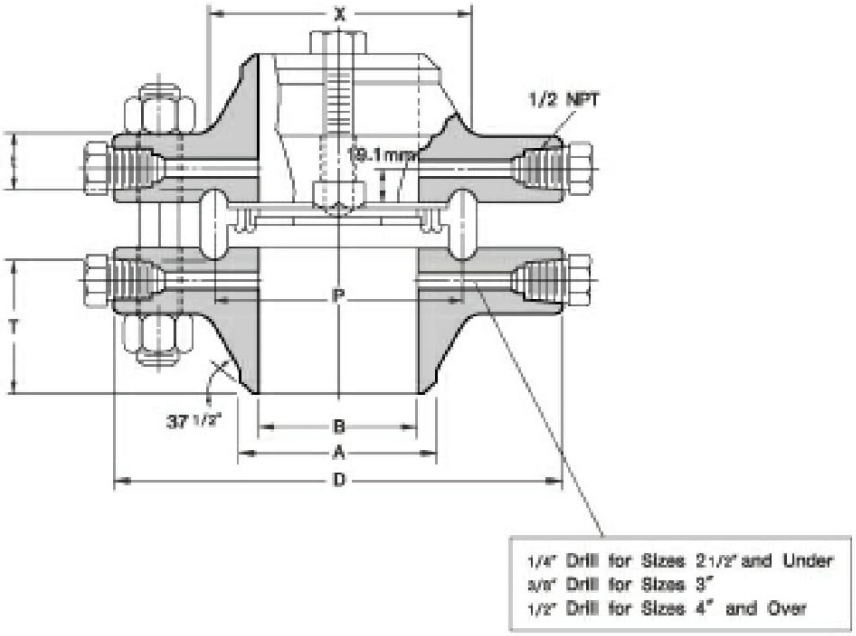

Unit : mm

Nominal Pipe Size	Pitch Diam.of Ring and Groove	Ring Number of Gasket	Depth of Jack Screw Slot		Jack Screw Size		Drilling Template					
			Raised Face	Ring Joint	Raised Face (inch)	Ring Joint (inch)	Diam.of Bolt Circle	Number of Bolts	Diam.of Stud Bolts (inch)	Diam.of Stud Holes	Length of Stud Bolts	
	P										Raised Face	Ring Joint
1	50.8	R16	9.7	6.4	5/8×4.00	5/8×4.75	88.9	4	5/8	17.5	127.0	146.1
1 1/4	60.3	R18	9.7	6.4	5/8×4.00	5/8×4.75	98.6	4	5/8	17.5	127.0	120.7
1 1/2	68.3	R20	12.7	6.4	3/4×4.25	3/4×5.00	114.3	4	3/4	21.0	133.4	152.4
2	82.6	R23	9.7	6.4	5/8×4.00	5/8×4.75	127.0	8	5/8	17.5	127.0	152.4
2 1/2	101.6	R26	12.7	6.4	3/4×4.25	3/4×5.00	149.4	8	3/4	20.6	133.4	158.8
3	123.8	R31	12.7	6.4	3/4×4.25	3/4×5.00	168.1	8	3/4	20.6	133.4	158.8
4	149.2	R37	6.4	15.7	3/4×3.00	3/4×4.00	200.2	8	7/8	25.4	139.7	152.4
5	181.0	R41	6.4	15.7	3/4×3.00	3/4×4.00	235.0	8	7/8	25.4	146.1	158.8
6	211.1	R45	12.7	22.4	1×3.50	1×4.00	269.7	12	7/8	25.4	158.8	165.1
8	269.9	R49	12.7	22.4	1×3.50	1×4.50	330.2	12	1	28.4	171.5	184.2
10	323.9	R53	12.7	22.4	1×4.00	1×4.50	387.4	16	1 1/8	31.8	190.5	203.2
12	381.0	R57	12.7	22.4	1×4.00	1×5.00	450.9	16	1 1/4	35.1	203.2	215.9
14	419.1	R61	12.7	22.4	1×4.25	1×5.00	514.4	20	1 1/4	35.1	209.6	228.6
16	469.9	R65	12.7	22.4	1×4.25	1×5.00	571.5	20	1 3/8	38.1	222.3	235.0
18	533.4	R69	12.7	22.4	1×4.50	1×5.00	628.7	24	1 3/8	38.1	235.0	241.3
20	584.2	R73	12.7	22.4	1×4.75	1×5.50	685.8	24	1 1/2	41.1	247.7	260.4
24	692.2	R77	12.7	22.4	1×5.00	1×6.00	812.8	24	1 3/4	47.8	279.4	285.8

(4) Unless otherwise specified, raised face unions are furnished with alloy bolt studs per ASTM A193 Grade B7 with American Standard heavy series hex.nuts ASTM A194 Class 2H.

(5) On ring joint flanges having a groove depth 0.375"(9.5mm) and less, the distance from the center line of the tap hole to the flange face is 0.750"(19.1mm). When the depth of groove is 0.438"(11.1mm) or greater, changes in drill size or method of drilling are necessary.

(6) Bolt lengths for raised face flanges inclued allowance for orifice and gasket thickness of 0.25"(6.4mm) for sizes 4-12 and 0.38"(9.7mm) for sizes 14-24. Bolt lengths for ring type joint flanges include allowance of 0.62"(15.7mm) for sizes 4-10, 0.75"(19.1mm) for sizes 12-18 and 0.88"(22.4mm) for sizes 20-24.

CLASS 600 ORIFICE FLANGES

WELDING NECK(RAISED FACE)

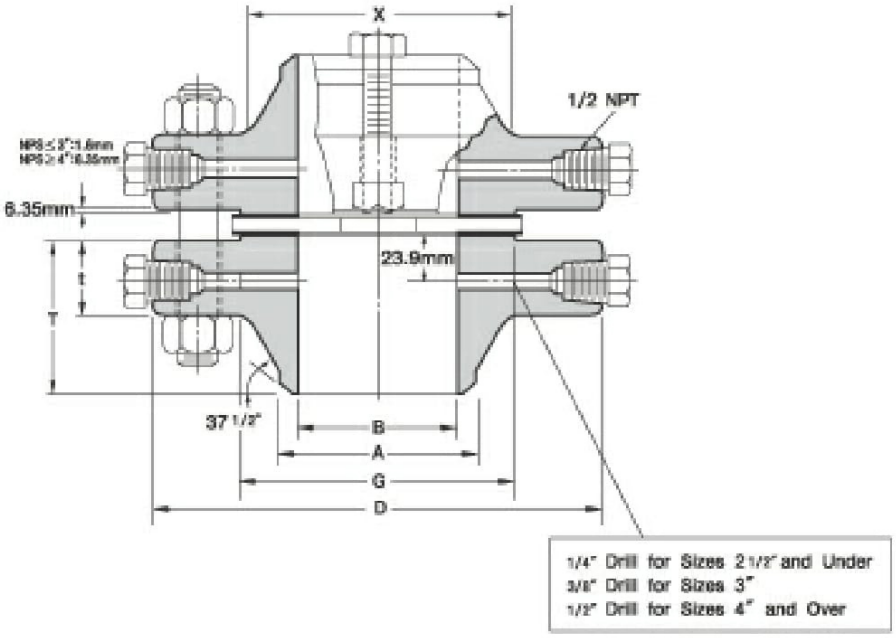

ANSI B16.36 FORGED FLANGES

Unit : mm

Nominal Pipe Size	Outside Diam. of Flange	Thickness of Flange(t)		Diam.of Hub at Base	Diam.of Raised Face	Diam.of Hub at Bevel	Length thru Hub(T)				Bore(B)	
							Welding Neck		Slip-on & Threaded			
	D	Raised Face	Ring Joint	X	G	A	Raised Face	Ring Joint	Raised Face	Ring Joint	Welding Neck	Slip-on
1	124	38.1	31.8	53.8	50.8	33.5	82.6	76.2	47.8	41.1	See Note(1) To be specified by purchaser	34.5
1 1/4	133	38.1	31.8	63.5	63.5	42.2	84.1	77.7	46.0	39.6		43.2
1 1/2	155	38.1	31.8	69.9	73.2	48.3	85.9	79.2	47.8	41.1		49.5
2	165	38.1	31.8	84.1	91.9	60.5	85.9	79.2	49.3	42.9		62.0
2 1/2	191	38.1	31.8	100.1	104.6	73.2	88.9	82.6	50.8	44.5		74.7
3	210	38.1	31.8	117.3	127.0	88.9	88.9	82.6	52.3	46.0		90.7
4	273	38.1	38.1	152.4	157.2	114.3	101.6	101.6	53.8	53.8		116.1
5	330	44.5	44.5	189.0	185.7	141.2	114.3	114.3	60.5	60.5		143.8
6	356	47.8	47.8	222.3	215.9	168.4	117.3	117.3	66.5	66.5		170.7
8	419	55.6	55.6	273.1	269.7	219.2	133.4	133.4	76.2	76.2		221.5
10	508	63.5	63.5	342.9	323.9	273.1	152.4	152.4	85.9	85.9		276.4
12	559	66.5	66.5	400.1	381.0	323.9	155.4	155.4	91.9	91.9		327.2
14	603	69.9	69.9	431.8	412.8	355.6	165.1	165.1				
16	686	76.2	76.2	495.3	469.9	406.4	177.8	177.8				
18	743	82.6	82.6	546.1	533.4	457.2	184.2	184.2				
20	813	88.9	88.9	609.6	584.2	508.0	190.5	190.5				
24	940	101.6	101.6	717.6	692.2	609.6	203.2	203.2				

Notes:

(1) For inside diameter of pipes (corresponding to 'Bore' (B) of Welding Neck Flanges), refer to page 92.

(2) Class 600 Flanges of sizes 3"(76.2mm) and smaller with be furnished with 0.06"(1.6mm)raised face, which is included in 'Thickness' (t) and 'Length through Hub' (T)
The 0.25"(6.35mm)raised face for sizes 4" and larger is not included in(t)and (T).

(3) Each union includes two carbon steel jack screw bolts with hexagon nuts.

(4) Bolt lengths for raised face flanges include allowance for orifice and gasket thickness of 0.25" (6.4mm) for sizes 4-12 and 0.38" (9.7mm) for sizes 14-24. Bolt lengths for ring type joint flanges include allowance of 0.62(15.7mm) for sizes 4-10, 0.75" (19.1mm) for sizes 12-18 and 0.88"(22.4mm) for sizes 20-24.

WELDING NECK(RING-TYPE JOINT)

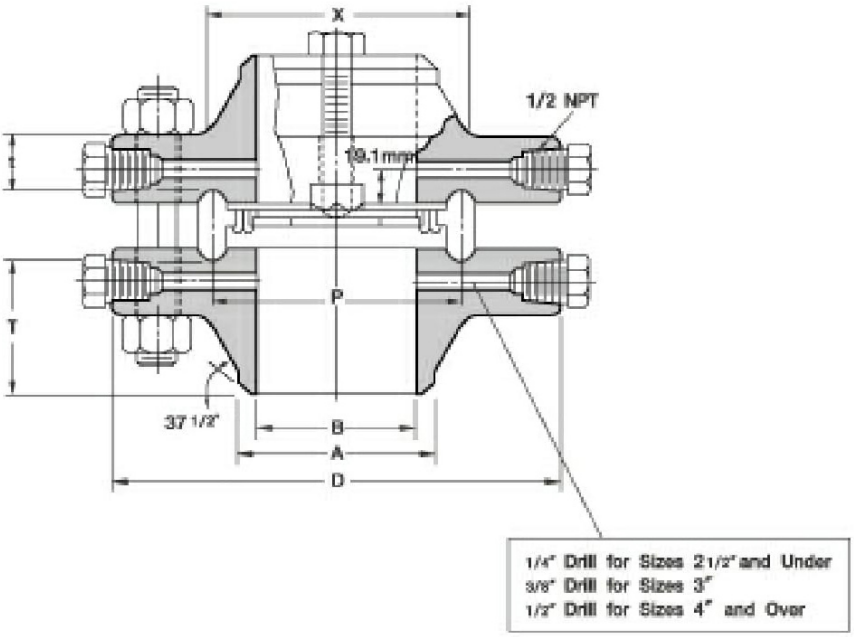

Unit : mm

Nominal Pipe Size	Pitch Diam.of Ring and Groove	Ring Number of Gasket	Depth of Jack Screw Slot		Jack Screw Size		Drilling Template						
			Raised Face	Ring Joint	Raised Face (inch)	Ring Joint (inch)	Diam.of Bolt Circle	Number of Bolts	Diam.of Stud Bolts (inch)	Diam.of Bolt Holes		Length of Stud Bolts	
	P									RF	RTJ	Raised Face	Ring Joint
1	50.8	R16	9.7	6.4	5/8×4.00	5/8×4.75	88.9	4	5/8	17.5	19.1	127.0	146.1
1 1/4	60.3	R18	9.7	6.4	5/8×4.00	5/8×4.75	98.6	4	5/8	17.5	–	127.0	146.1
1 1/2	68.3	R20	12.7	6.4	3/4×4.25	3/4×5.00	114.3	4	3/4	20.6	22.4	133.4	152.4
2	82.6	R23	9.7	6.4	5/8×4.00	5/8×4.75	127.0	8	5/8	17.5	19.7	127.0	152.4
2 1/2	101.6	R26	12.7	6.4	3/4×4.25	3/4×5.00	149.4	8	3/4	20.6	22.4	133.4	158.8
3	123.8	R31	12.7	6.4	3/4×4.25	3/4×5.00	168.1	8	3/4	20.6	22.4	133.4	158.8
4	149.2	R37	6.4	15.7	3/4×3.00	3/4×4.00	215.9	8	7/8	25.4	25.4	152.4	165.1
5	181.0	R41	6.4	15.7	3/4×3.50	3/4×4.50	266.7	8	1	28.4	28.4	139.7	177.8
6	211.1	R45	12.7	22.4	1×3.50	1×4.50	292.1	12	1	28.4	28.4	177.8	190.5
8	269.9	R49	12.7	22.4	1×4.00	1×4.75	349.3	12	1 1/8	31.8	31.8	196.9	209.6
10	323.9	R53	12.7	22.4	1×4.00	1×5.00	431.8	16	1 1/4	35.1	35.1	222.3	235.0
12	381.0	R57	12.7	22.4	1×4.50	1×5.00	489.0	20	1 1/4	35.1	35.1	228.6	241.3
14	419.1	R61	12.7	22.4	1×5.00	1×5.50	527.1	20	1 3/8	38.1	38.1	241.3	254.0
16	469.9	R65	12.7	22.4	1×5.00	1×5.50	603.3	20	1 1/2	41.1	41.1	260.4	273.1
18	533.4	R69	12.7	22.4	1×5.00	1×5.75	654.1	20	1 5/8	44.5	44.5	279.4	292.1
20	584.2	R73	12.7	22.4	1×6.00	1×6.25	723.9	24	1 5/8	44.5	44.5	298.5	317.5
24	692.2	R77	12.7	22.4	1×6.00	1×7.00	838.2	24	1 7/8	50.8	50.8	336.6	342.9

(5) Unless otherwise specified, raised face unions are furnished with alloy bolt studs per ASTM A193 Grade B7 with American Standard heavy series hex nuts ASTM A194 Class 2H.

(6) On ring joint flanges having a groove depth 0.375"(9.5mm) and less, the distance from the center line of the tap hole to the flange face is 0.750"(19.1mm). When the depth of groove is 0.438"(11.1mm) or greater, changes in drill size or method of drilling are necessary.

CLASS 900-1500 ORIFICE FLANGES

WELDING NECK
(RAISED FACE)

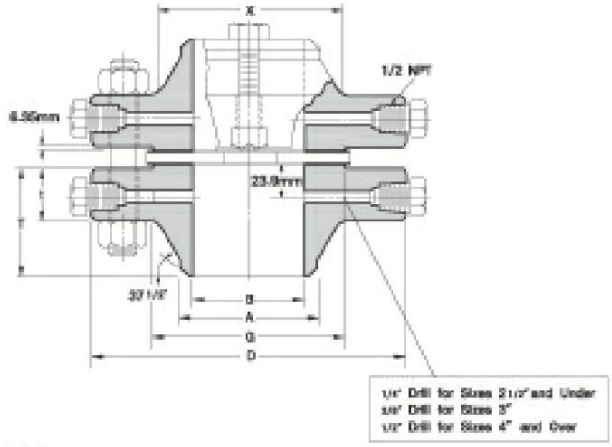

ANSI B16.36 FORGED FLANGES

Unit : mm

Nominal Pipe Size	Outside Diam. of Flange	Thickness of Flange(t)		Diam.of Hub at Base	Diam.of Raised Face	Diam.of Hub at Bevel	Length thru Hub(T)				Bore(B)	
							Welding Neck		Slip-on & Threaded		Welding Neck	Slip-on
	D	Raised Face	Ring Joint	X	G	A	Raised Face	Ring Joint	Raised Face	Ring Joint		
CLASS 900												
3	241	38.1	38.1	127.0	127.0	88.9	101.6	101.6	53.8	53.8	To be specified by purchaser.	90.7
4	292	44.5	44.5	158.8	157.2	114.3	114.3	114.3	69.9	69.9		116.1
5	349	50.8	50.8	190.5	185.7	141.2	127.0	127.0	79.2	79.2		143.8
6	381	55.6	55.6	235.0	215.9	168.4	139.7	139.7	85.9	85.9		170.7
8	470	63.5	63.5	298.5	269.7	219.2	162.1	162.1	101.6	101.6		221.5
10	546	69.9	69.9	368.3	323.9	273.1	184.2	184.2	108.0	108.0		276.4
12	610	79.2	79.2	419.1	381.0	323.9	200.2	200.2	117.3	117.3		327.2
14	641	85.9		450.9	412.8	355.6	212.9					
16	705	88.9		508.0	469.9	406.4	215.9					
18	787	101.6		565.2	533.4	457.2	228.6					
20	857	108.0		622.3	584.2	508.0	247.7					
24	1041	139.7		749.3	692.2	609.6	292.1					
CLASS 1500												
1	149	38.1	38.1	52.3	50.8	33.5	82.6	82.6	47.8	44.5	To be specified by purchaser.	34.5
1 1/4	159	35.1	35.1	63.5	63.5	42.2	73.2	73.2	47.8	44.5		43.2
1 1/2	178	38.1	38.1	69.9	73.2	48.3	88.9	88.9	47.8	44.5		49.5
2	216	38.1	38.1	104.6	91.9	60.5	101.6	101.6	57.2	57.2		62.0
2 1/2	244	41.1	41.1	124.0	104.6	73.2	104.6	104.6	63.5	63.5		74.7
3	267	47.8	47.8	133.4	127.0	88.9	117.3	117.3	73.2	73.2		90.7
4	311	53.8	53.8	162.1	157.2	114.3	124.0	124.0	90.4	90.4		116.1
5	375	73.2	73.2	196.9	185.7	141.2	155.4	104.6	104.6	104.6		143.8
6	394	82.6	82.6	228.6	215.9	168.4	171.5	171.5	119.1	119.1		170.7
8	483	92.0	92.0	292.1	269.7	219.2	212.9	212.9	142.7	142.7		221.5
10	584	108.0	108.0	368.3	323.9	273.1	254.0	254.0	158.8	158.8		276.4
12	673	124.0	124.0	450.9	381.0	323.9	282.4	282.4	180.8	180.8		327.2
14	749	133.4		495.3	412.8	355.6	298.5					
16	826	146.1		552.5	469.9	406.4	311.2					
18	914	162.1		596.9	533.4	457.2	327.2					
20	984	177.8		641.4	584.2	508.0	355.6					
24	1168	203.2		762.0	692.2	609.6	406.4					

Notes:
(1) For the inside diameter of pipes (corresponding to 'Bore' (B) of Welding Neck Flanges) refer to page 92.
(2) Class 900 dimensions of size 1"(25.4mm) through 2 1/2" are the same as for Class 1500.
(3) Class 900 and 1500 is not included in 'Thickness of Flange' (t) and 'Length through Hub' (T).
(4) Each union includes two carbon steel jack screw bolts with hexagon nuts.

WELDING NECK
(RING-TYPE JOINT)

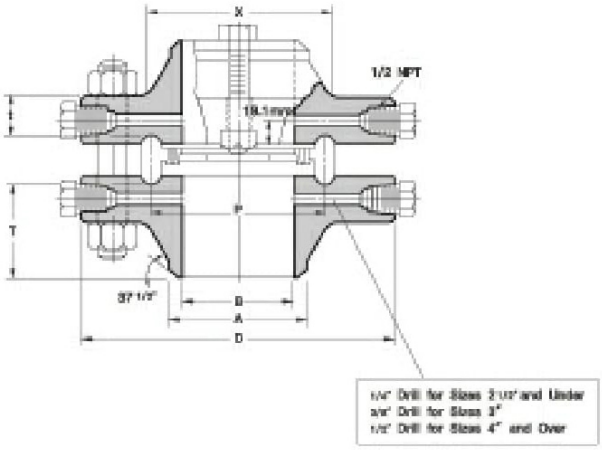

Unit : mm

Nominal Pipe Size	Pitch Diam. of Ring and Groove P	Ring Number of Gasket	Depth of Jack Screw slot		Jack Screw Size		Drilling Template					
			Raised Face	Ring Joint	Raised Face (inch)	Ring Joint (inch)	Diam. of Bolt Circle	Number of Bolts	Diam. of Stud Bolts (inch)	Diam. of Bolts Holes	Length of Stud Bolts Raised Face	Length of Stud Bolts Ring Joint
CLASS 900												
3	123.8	R31	9.7	15.7	3/4×3.00	3/4×4.00	190.5	8	7/8	25.4	152.4	165.1
4	149.2	R37	9.7	15.7	3/4×3.50	3/4×4.50	235.0	8	1 1/8	31.8	177.8	190.5
5	181.0	R41	9.7	15.7	3/4×3.50	3/4×4.50	279.4	8	1 1/4	35.1	190.5	203.2
6	211.1	R45	15.7	22.4	1×4.50	1×4.75	317.5	12	1 1/8	31.8	196.9	209.6
8	269.9	R49	15.7	22.4	1×4.50	1×5.00	393.7	12	1 3/8	38.1	228.6	241.3
10	323.9	R53	15.7	22.4	1×4.50	1×5.25	469.9	16	1 3/8	38.1	241.3	254.0
12	381.0	R57	15.7	22.4	1×4.50	1×5.50	533.4	20	1 3/8	38.1	260.4	273.1
14							558.8	20	1 1/2	41.1	279.4	
16							616.0	20	1 5/8	44.5	292.1	
18							685.8	20	1 7/8	50.8	330.2	
20							749.3	20	2	53.8	355.6	
24							901.7	20	2 1/2	66.5	444.5	
CLASS 1500												
1	50.8	R16	6.4	12.7	5/8×3.00	5/8×3.50	101.6	4	7/8	25.4	152.4	158.8
1 1/4	60.3	R18	6.4	12.7	5/8×3.00	5/8×3.50	111.3	4	7/8	25.4	139.7	146.1
1 1/2	68.3	R20	6.4	12.7	5/8×3.00	5/8×3.50	124.0	4	1	28.4	158.8	165.1
2	95.3	R24	6.4	12.7	5/8×3.00	5/8×4.00	165.1	8	7/8	25.4	152.4	165.1
2 1/2	108.0	R27	6.4	12.7	5/8×3.00	5/8×4.00	190.5	8	1	28.4	165.1	177.8
3	136.5	R35	9.7	15.7	5/8×3.50	3/4×4.50	203.2	8	1 1/8	31.8	184.2	196.9
4	161.9	R39	9.7	15.7	3/4×3.50	3/4×4.50	241.3	8	1 1/4	35.1	203.2	215.9
5	193.7	R44	9.7	15.7	3/4×3.50	3/4×4.50	292.1	8	1 1/2	41.1	247.7	260.4
6	211.1	R46	15.8	22.4	1×6.00	1×6.50	317.5	12	1 3/8	38.1	266.7	279.4
8	269.9	R50	15.7	22.4	1×6.50	1×6.50	393.7	12	1 5/8	44.5	298.5	317.5
10	323.9	R54	15.7	22.4	1×6.50	1×7.00	482.6	12	1 7/8	50.8	342.9	362.0
12	381.0	R58	15.7	22.4	1×6.50	1×8.00	571.5	16	2	53.8	381.0	406.4
14							635.0	16	2 1/4	60.5	412.8	
16							704.9	16	2 1/2	66.5	450.9	
18							774.7	16	2 3/4	73.2	501.7	
20							831.9	16	3	79.2	546.1	
24							990.6	16	3 1/2	91.9	622.3	

(5) Unless otherwise specified raised face unions are furnished with alloy bolt studs per ASTM A193 Grade B7 with American Standard heavy series hex. ASTM A194 Class 2H.

(6) On ring joint flanges having a groove depth 0.375"(9.5mm) and less, the distance from the center line of the tap hole to the flange face is 0.750"(19.1mm). When the depth of groove is 0.436"(11.1mm)or greater, changes in drill size or method of drilling are necessary.

(7) Bolt lenghts for raised face flanges include allowance for orifice and gasket thickness of 0.25"(6.4mm) for sizes 4–12 and 0.38"(9.7mm) for sizes 14–24. Bolt lengths for ring type joint flanges include allowance of 0.62"(15.7mm) for sizes 4–10, 0.75"(19.1mm) for sizes 12–18 and 0.88"(22.4mm) for size 20–24.

CLASS 2500 ORIFICE FLANGES

WELDING NECK(RAISED FACE)

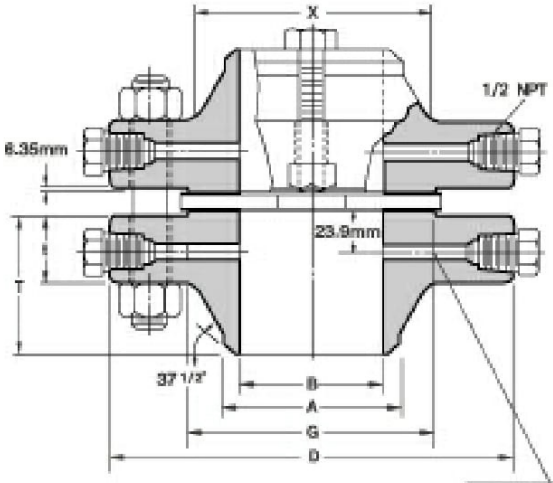

WELDING NECK(RING-TYPE JOINT)

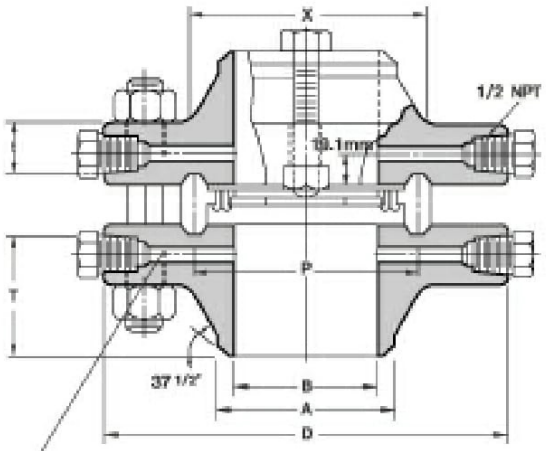

1/4" Drill for Sizes 2 1/2" and Under
3/8" Drill for Sizes 3"
1/2" Drill for Sizes 4" and Over

ANSI B16.36 FORGED FLANGES

Unit : mm

Nominal Pipe Size	O.D.of Flange Face	O.D.of Raised Flange	Thick. of Flange	Length Thru Hub	Diam.of Hub	Diam.of Hub at Bevel	Bore	Ring Type Joint Pitch Diam.	Ring Number	Drilling Template Diam. Bolt Circle	Number of Holes	Diam.of Holes	Diam.of Bolt (inch)	Length of Stud Bolts Raised Face	Ring Joint
	D	G	t	T	X	A	B	P							
1	159	50.8	38.1	91.9	57.2	33.5	See Note(1) To be specified by purchaser	60.3	R18	108.0	4	25.4	7/8	152.4	158.8
1 1/2	203	73.2	44.5	111.3	79.2	48.3		82.6	R23	146.1	4	31.8	1 1/8	177.8	190.5
2	235	91.9	50.8	127.0	95.3	60.5		101.6	R26	171.5	8	28.4	1	184.2	196.9
2 1/2	267	104.6	57.2	142.7	114.3	73.2		111.1	R28	196.9	8	31.8	1 1/8	203.2	215.9
3	305	127.0	66.5	168.1	133.4	88.9		127.0	R32	228.6	8	35.1	1 1/4	228.6	241.3
4	356	157.2	76.2	190.5	165.1	114.3				273.1	8	41.1	1 1/2	260.4	
6	483	215.9	108.0	273.1	235.0	168.4				368.3	8	53.8	2	349.3	
8	552	269.7	127.0	317.5	304.8	219.2				438.2	12	53.8	2	387.4	
10	673	323.9	165.1	419.1	374.7	273.1				539.8	12	66.5	2 1/2	489.0	
12	762	381.0	184.2	463.6	441.5	323.9				619.3	12	73.2	2 3/4	539.8	

Notes:

(1) For the inside diameter of pipe (corresponding to 'Bore' (B) of Welding Neck Flange), refer to page 92.
(2) Class 2500 flanges will be furnished with 0.25" (6.4mm) raised face, which is not included in "Thickness" (t) and 'Length through Hub" (T).
(3) Each union includes two carbon steel jack screw bolts with hex.nuts.
(4) Unless otherwise specified, raised face unions are furnished with allow bolt studs per ASTM A193 Grade B7 with American Standard heavy series hex nuts ASTM A194 Class 2H.
(5) On ring joint flanges having a groove depth 0.375"(9.5mm) and less, the distance from the center line of the tap hole to the flange face is 0.750"(19.1mm). When the depth of groove is 0.438"(11.1mm)or greater, changes in drill size or method of drilling are necessary.
(6) Class 2500 Slip-on flanges are not covered by ANSI B16.5.
(7) Bolt lengths for raised face flanges include allowance for orifice and gasket thickness of 0.25"(6.4mm) for sizes 4-12 and 0.38"(9.7mm) for sizes 14-24. Bolt lengths for ring type joint flanges include allowance of 0.62"(15.7mm) for sizes 4-10, 0.75"(19.1mm) for sizes 12-18 and 0.88"(22.4mm) for sizes 20.

LONG WELDING NECKS FLANGES

- Class 150 Flanges
- Class 300 Flanges
- Class 400 Flanges
- Class 600 Flanges
- Class 900 Flanges
- Class 1500 Flanges
- Class 2500 Flanges

CLASS 150 FLANGES

LONG WELDING NECKS
ANSI B16.5 FORGED FLANGES

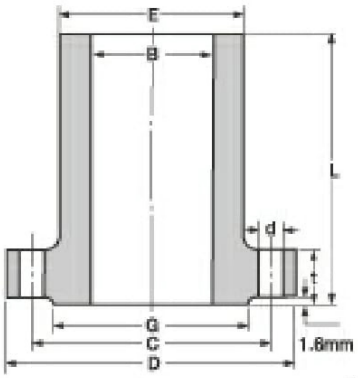

Unit : mm

Nominal Pipe Size	Cut side Diameter	O.D.of Raised Face	Hub Diameter at Bevel	Diameter of Bore	Thickness of Flange (Min.)	Length Thru Hub	Drilling		
							Diameter of Bolt Circle	Number of Holes	Diameter of Holes
	D	G	E	B	t	L	C		d
1/2	89	35.1	30.2	12.7	11.2	229	60.5	4	15.7
3/4	99	42.9	38.1	19.1	12.7	229	69.9	4	15.7
1	108	50.8	50.8	25.4	14.2	229	79.2	4	15.7
1 1/4	117	63.5	60.5	31.8	15.7	229	88.9	4	15.7
1 1/2	127	73.2	66.5	38.1	17.5	229	98.6	4	15.7
2	152	91.9	82.6	50.8	19.1	229	120.7	4	19.1
2 1/2	178	104.6	95.3	63.5	22.4	229	139.7	4	19.1
3	191	127.0	108.0	76.2	23.9	229	152.4	4	19.1
3 1/2	216	139.7	124.0	88.9	23.9	229	177.8	8	19.1
4	229	157.2	139.7	101.6	23.9	305	190.5	8	19.1
5	254	185.7	165.1	127.0	23.9	305	215.9	8	22.4
6	279	215.9	196.9	152.4	25.4	305	241.3	8	22.4
8	343	269.7	247.7	203.2	28.4	305	298.5	8	22.4
10	406	323.9	304.8	254.0	30.2	305	362.0	12	25.4
12	483	381.0	365.3	304.8	31.8	305	431.8	12	25.4
14	533	412.8	406.4	355.6	35.1	305	476.3	12	28.4
16	597	469.9	457.2	406.4	36.6	305	539.8	16	28.4
18	635	533.4	508.0	457.2	39.6	305	577.9	16	31.8
20	699	584.2	558.8	508.0	42.9	305	635.0	20	31.8
24	813	692.2	666.8	609.6	47.8	305	749.3	20	35.1

CLASS 300 FLANGES

LONG WELDING NECKS

Unit : mm

Nominal Pipe Size	Cut side Diameter	O.D.of Raised Face	Hub Diameter at Bevel	Diameter of Bore	Thickness of Flange (Min.)	Length Thru Hub	Drilling		
							Diameter of Bolt Circle	Number of Holes	Diameter of Holes
	D	G	E	B	t	L	C		d
1/2	95	35.1	38.1	12.7	14.2	229	66.5	4	15.7
3/4	117	42.9	47.8	19.1	15.7	229	82.6	4	19.1
1	124	50.8	53.8	25.4	17.5	229	88.9	4	19.1
1 1/4	133	63.5	63.5	31.8	19.1	229	98.6	4	19.1
1 1/2	155	73.2	69.9	38.1	20.6	229	114.3	4	22.4
2	165	91.9	84.1	50.8	22.4	229	127.0	8	19.1
2 1/2	191	104.6	100.1	63.5	25.4	229	149.4	8	22.4
3	210	127.0	117.3	76.2	28.4	229	168.1	8	22.4
3 1/2	229	139.7	133.4	88.9	30.2	229	184.2	8	22.4
4	254	157.2	146.1	101.6	31.8	229	200.2	8	22.4
5	279	185.7	177.8	127.0	35.1	305	235.0	8	22.4
6	318	215.9	206.2	152.4	36.6	305	269.7	12	22.4
8	381	269.7	260.4	203.2	41.1	305	330.2	12	25.4
10	445	323.9	320.5	254.0	47.8	305	387.4	16	28.4
12	521	381.0	374.7	304.8	50.8	305	450.9	16	31.8
14	584	412.8	425.5	355.6	53.8	305	514.4	20	31.8
16	648	469.9	482.6	406.4	57.2	305	571.5	20	35.1
18	711	533.4	533.4	457.2	60.5	305	628.7	24	35.1
20	775	584.2	587.2	508.0	63.5	305	685.8	24	35.1
24	914	692.2	701.5	609.6	69.9	305	812.8	24	41.1

Notes:
(1) Bore (B) is the same as nominal pipe size.
(2) Welding necks longer than listed are available in all sizes on special order.

CLASS 400 FLANGES

LONG WELDING NECKS
ANSI B16.5 FORGED FLANGES

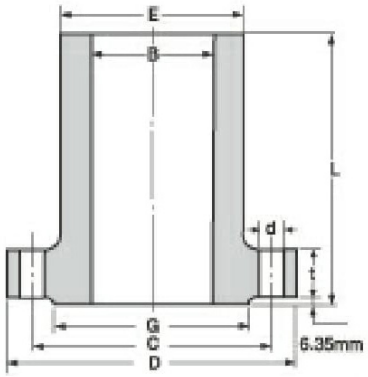

Unit : mm

Nominal Pipe Size	Out side Diameter	O.D of Raised Face	Hub Diameter at Bevel	Diameter of Bore	Thickness of Flange (Min.)	Length Thru Hub	Drilling		
							Diameter of Bolt Circle	Number of Holes	Diameter of Holes
	D	G	E	B	t	L	C		d
1 1 1/4 1 1/2 2 2 1/2 3 3 1/2	Use Class 600 dimensions in these sizes.								
4	254	157.2	146.1	101.6	35.1	229	200.2	8	25.4
5	279	185.7	177.8	127.0	38.1	305	235.0	12	25.4
6	318	215.9	206.2	152.4	41.1	305	269.7	12	25.4
8	381	269.7	260.4	203.2	47.8	305	330.2	12	28.4
10	445	323.9	320.5	254.0	53.8	305	387.4	16	31.8
12	521	381.0	374.7	304.8	57.2	305	450.9	16	35.1
14	584	412.8	425.5	355.6	60.5	305	514.4	20	35.1
16	648	469.9	482.6	406.4	63.5	305	571.5	24	38.1
18	711	533.4	533.4	457.2	66.5	305	628.7	24	38.1
20	775	584.2	587.2	508.0	69.9	305	685.8	24	41.1
24	914	692.2	701.5	609.6	76.2	305	812.8	24	47.8

CLASS 600 FLANGES

LONG WELDING NECKS

Unit : mm

Nominal Pipe Size	Out side Diameter	O.D of Raised Face	Hub Diameter at Bevel	Diameter of Bore	Thickness of Flange (Min.)	Length Thru Hub	Drilling		
							Diameter of Bolt Circle	Number of Holes	Diameter of Holes
	D	G	E	B	t	L	C		d
1	124	50.8	53.8	25.4	17.5	229	88.9	4	19.1
1 1/4	133	63.5	63.5	31.8	20.6	229	98.6	4	19.1
1 1/2	155	73.2	69.9	38.1	22.4	229	114.3	4	22.4
2	165	91.9	84.1	50.8	25.4	229	127.0	8	19.1
2 1/2	191	104.6	100.1	63.5	28.4	229	149.4	8	22.4
3	210	127.0	117.3	76.2	31.8	229	168.1	8	22.4
3 1/2	229	139.7	133.4	88.9	35.1	229	184.2	8	25.4
4	273	157.2	152.4	101.6	38.1	229	215.9	8	25.4
5	330	185.7	190.5	127.0	44.5	305	266.7	8	28.4
6	356	215.9	222.3	152.4	47.8	305	292.1	12	28.4
8	419	269.7	273.1	203.2	55.6	305	349.3	12	31.8
10	508	323.9	342.9	254.0	63.5	305	431.8	16	35.1
12	559	381.0	400.1	304.8	66.5	305	489.0	20	35.1
14	603	412.8	431.8	355.6	69.9	305	527.1	20	38.1
16	686	469.9	495.3	406.4	76.2	305	603.3	20	41.1
18	743	533.4	546.1	457.2	82.6	305	654.1	20	44.5
20	813	584.2	609.6	508.0	88.9	305	723.9	24	44.5
24	940	692.2	717.6	609.6	101.6	305	838.2	24	50.8

Notes:
(1) Bore (B) is the same as nominal pipe size.
(2) Welding necks longer than listed are available in all sizes on special order.

CLASS 900 FLANGES

LONG WELDING NECKS
ANSI B16.5 FORGED FLANGES

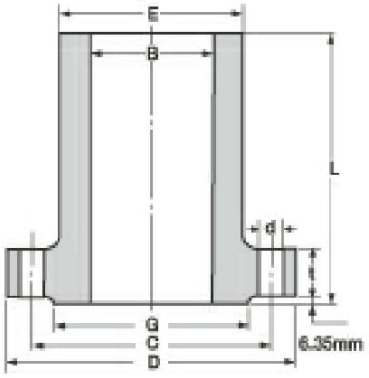

Unit : mm

Nominal Pipe Size	Out side Diameter	O.D.of Raised Face	Hub Diameter at Bevel	Diameter of Bore	Thickness of Flange (Min.)	Length Thru Hub	Diameter of Bolt Circle	Drilling Number of Holes	Drilling Diameter of Holes
	D	G	E	B	t	L	C		d
1	Use Class 1500 dimensions in these sizes.								
1 1/4									
1 1/2									
2									
2 1/2									
3	241	127.0	127.0	76.2	38.1	305	190.5	8	25.4
4	292	157.2	158.8	101.6	44.5	305	235.0	8	31.8
5	349	185.7	190.5	127.0	50.8	305	279.4	8	35.1
6	381	215.9	235.0	152.4	55.6	305	317.5	12	31.8
8	470	269.7	298.5	203.2	63.5	305	393.7	12	38.1
10	546	323.9	368.3	254.0	69.9	406	469.9	16	38.1
12	610	381.0	419.1	304.8	79.2	406	533.4	20	38.1
14	641	412.8	450.9	355.6	85.9	To be specified by purchaser.	558.8	20	41.1
16	705	469.9	508.0	406.4	88.9		616.0	20	44.5
18	787	533.4	565.2	457.2	101.6		685.8	20	50.8
20	857	584.2	622.3	508.0	108.0		749.3	20	53.8
24	1041	692.2	749.3	609.6	139.7		901.7	20	66.5

CLASS 1500 FLANGES

LONG WELDING NECKS

Unit : mm

Nominal Pipe Size	Out side Diameter	O.D.of Raised Face	Hub Diameter at Bevel	Diameter of Bore	Thickness of Flange (Min.)	Length Thru Hub	Diameter of Bolt Circle	Drilling Number of Holes	Drilling Diameter of Holes
	D	G	E	B	t	L	C		d
1	149	50.8	52.3	25.4	28.4	229	101.6	4	25.4
1 1/4	159	63.5	63.5	31.8	28.4	229	111.3	4	25.4
1 1/2	178	73.2	69.9	38.1	31.8	229	124.0	4	28.4
2	216	91.9	104.6	50.8	38.1	229	165.1	8	25.4
2 1/2	244	104.6	124.0	63.5	41.1	305	190.5	8	28.4
3	267	127.0	133.4	76.2	47.8	305	203.2	8	31.8
4	311	157.2	162.1	101.6	53.8	305	241.3	8	35.1
5	375	185.7	196.9	127.0	73.2	305	292.1	8	41.1
6	394	215.9	228.6	152.4	82.6	305	317.5	12	38.1
8	483	269.7	292.1	203.2	91.9	305	393.7	12	44.5
10	584	323.9	368.3	254.0	108.0	406	482.6	12	50.8
12	673	381.0	450.9	304.8	124.0	406	571.5	16	53.8
14	749	412.8	495.3	355.6	133.4	To be specified by purchaser.	635.0	16	60.5
16	826	469.9	552.5	406.4	146.1		704.9	16	66.5
18	914	533.4	596.9	457.2	162.1		774.7	16	73.2
20	984	584.2	641.4	508.0	177.8		831.9	16	79.2
24	1168	692.2	762.0	609.6	203.2		990.6	16	91.9

Notes:
(1) Bore (B) is the same as nominal pipe size.
(2) Welding necks longer than listed are available in all sizes on special order.

CLASS 2500 FLANGES

LONG WELDING NECKS
ANSI B16.5 FORGED FLANGES

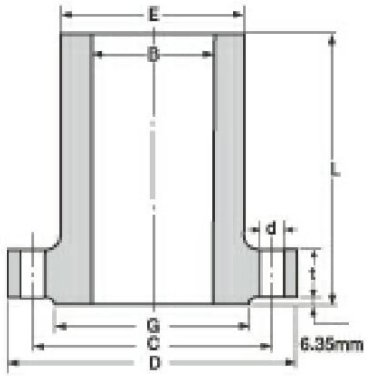

Unit : mm

Nominal Pipe Size	Out side Diameter	O.D of Raised Face	Hub Diameter at Bevel	Diameter of Bore	Thickness of Flange (Min.)	Length Thru Hub	Drilling		
							Diameter of Bolt Circle	Number of Holes	Diameter of Holes
	D	G	E	B	t	L	C		d
1	159	50.8	57.2	25.4	35.1	229	108.0	4	25.4
1 1/4	184	63.5	73.2	31.8	38.1	229	130.0	4	28.4
1 1/2	203	73.2	79.2	38.1	44.5	229	146.1	4	31.8
2	235	91.9	95.3	50.8	50.8	229	171.5	8	28.4
2 1/2	267	104.6	114.3	63.5	57.2	305	196.9	8	31.8
3	305	127.0	133.4	76.2	66.5	305	228.6	8	35.1
4	356	157.2	165.1	101.6	76.2	305	273.1	8	41.1
5	419	185.7	203.2	127.0	91.9	305	323.9	8	47.8
6	483	215.9	235.0	152.4	108.0	305	368.3	8	53.8
8	552	269.7	304.8	203.2	127.0	305	438.2	12	53.8
10	673	323.9	374.7	254.0	165.1	406	539.8	12	66.5
12	762	381.0	441.5	304.8	184.2	406	619.3	16	73.2

Notes:
(1) Bore (B) is the same as nominal pipe size.
(2) Welding necks longer than listed are available in all sizes on special order.

GUIDE TO MATERIAL LAYOUT & SPECIFICATIONS

Pipe	Weld Fittings	Screwed & Socket Fittings	Flanges	Valves
A53-B	A234 WPB	A105, A181 Gr.60 or 70	A105, A181 Gr.60 or 70	A105, A216 WCB
A106-B	A234 WPB	A105, A181 Gr.60 or 70	A105, A181 Gr.60 or 70	A105, A216 WCB
A312-T304	A403 WP304	A182 F304	A182 F304	A182, F304 CMO
A312-T316	A403 WP316	A182 F316	A182 F316	A182, F316 CM 8MO
A333 Gr.1 or 6	A420 WPL1 & 6	A350 LF1	A350 LF1	A350, LF1, A352 LCB
A333 Gr.3	A420 WPL3	A350 LF3	A350 LF3	A350, LF3, A352 LC3
A335-P1	A234 WP1	A182 LF1	A182 LF1	A217 WC6
A335-P11	A234 WP11	A182 LF11	A182 LF11	A182 F11, A217 WC6
A335-P12	A234 WP12	A182 LF12	A182 LF12	A217 WC6
A335-P22	A234 WP22	A182 LF22	A182 LF22	A182 F22, A 217 WC9
A335-P5	A234 WP5	A182 LF5	A182 LF5	A182 F5, A216 WC5
A335-P7	A234 WP7	A182 LF7	A182 LF7	A182 F7, A 217 WC12
A335-P9	A234 WP9	A182 LF9	A182 LF9	A182 F9, A217 WC12

STANDARD FINISH

STANDARD FINISHES for Face of Flange(ANSI B16.5)

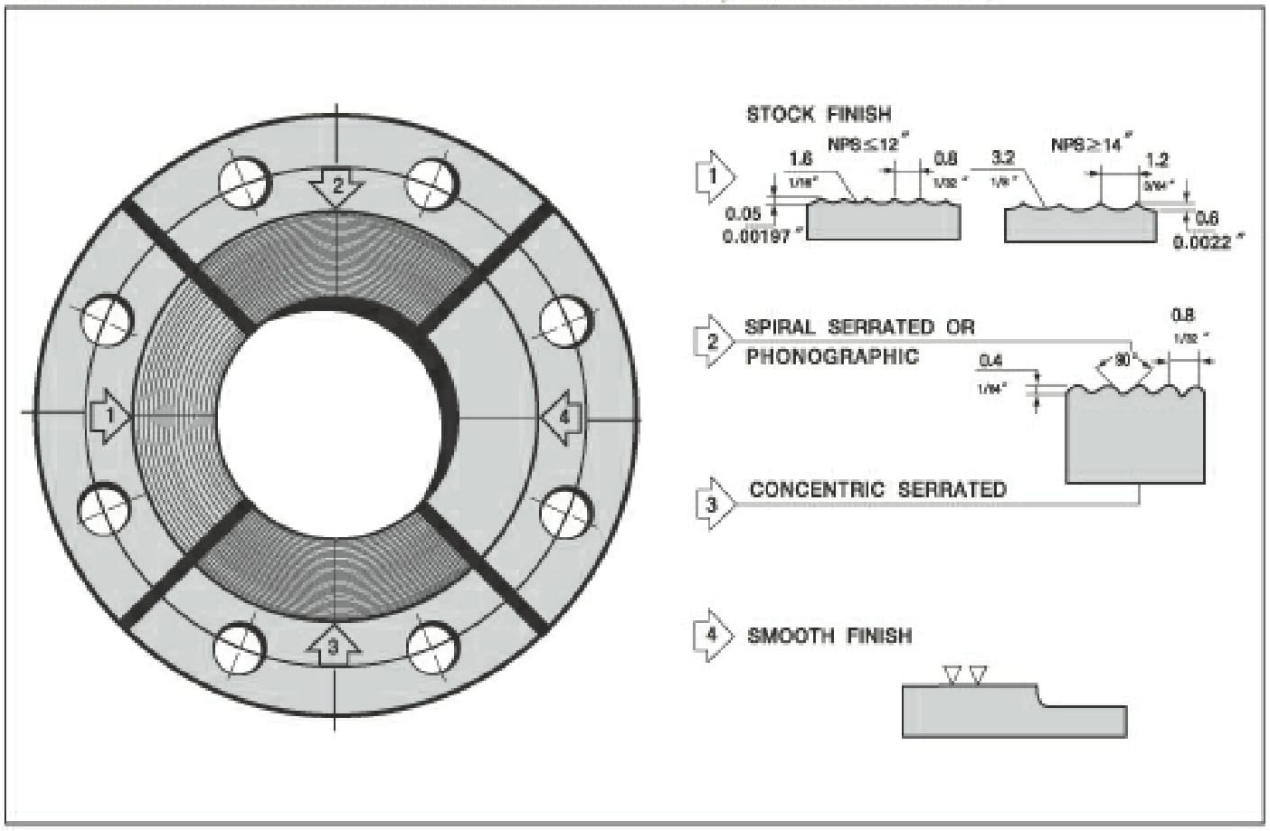

STOCK FINISH: The most widely used of any gasket finish, because, practically is suitable for all ordinary service conditions. This is continuous spiral groove. Flanges sizes 12"(304.8mm) and smaller, are produced with a 1/16" round-nosed tool at a feed of 1/32" per revolution. For sizes 14"(355.6mm) and larger, the finish is made with 1/8" round-nosed tool at a feed of 3/64" per revolution.

SPIRAL SERRATED OR PHONOGRAPHIC: This finish a produced by using a 90° round-nosed tool.

CONCENTRIC SERRATED: This finish a produced by using a 90° round-nosed tool.

SMOOTH FINISH: The cutting tool employed shall have an approximate 0.06" radius.
The resultant surface finish shall have a 125μ inch to 250μ inch.(ANSI B16.5 para 6.4.5.3)

1. Other Flange Facings.
   Either a serrated con-centric or serrated spiral finish having a resultant surface finish from 3.2 to 6.3μm(125 to 250μin.) average roughness shall be furnished. The cutting tool employed should have an approximate 1.5mm(0.06 in.) or larger radius, and there should be from 1.8 grooves/mm through 2.2 grooves/mm (45 grooves/in. through 55 grooves/in.).

2. TONGUE AND GROOVE, AND SMALL MALE AND FEMALE
   The gasket contact surface does not exceed 125μ inch. (3.2μm) roughness.

3. RING JOINT
   The inside wall surface of gasket groove does not exceed 63μ inch (1.6μm) roughness.

4. BLIND
   Blind flanges need not be faced in the center if, when this center part is raised, its diameter is at least 1 inch.
   smaller than the inside diameter of fittings of the corresponding pressure class. When the center part is depressed.
   its diameter is not greater than the inside diameter of the corresponding pressure class fittings. Machining of the depressed center is not required.

TOLERANCE

ANSI B16.5 FORGED FLANGES

SOLID FLANGE SLIP-ON WELDING NECK FLANGE TYPE OF GASKET SURFACE

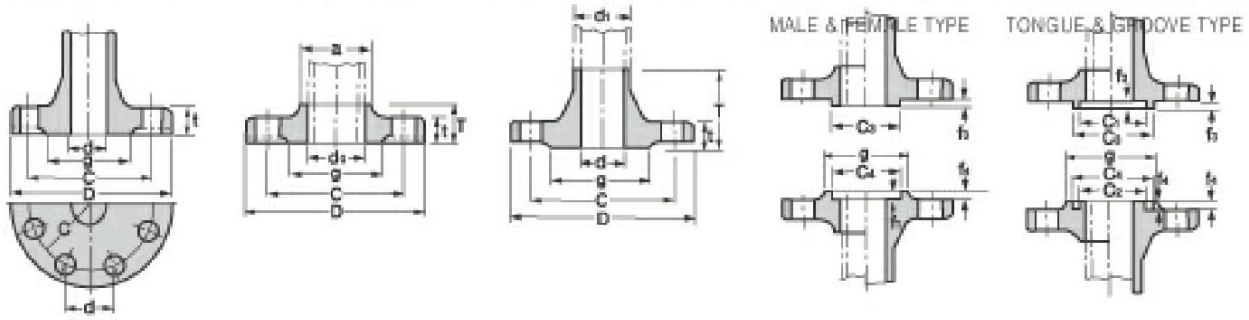

SLIP-ON, LAP JOINT AND BLIND FLANEGE

Outside Diameter	When O.D.is 24" or Less	±1/16"(1.6mm)
	When O.D.is Over 24"	±1/8"(3.2mm)
Inside Diameter	Threaded	Within limits on boring gauge
	Socket-Welding, Slip-on and Lap joint	10" & Smaller +1/32"(0.8mm), -0" 12" & Larger +1/16"(1.6mm), -0"
Outside Diameter of Hub	5" and Smaller	+3/32"(2.4mm) -1/32"(0.8mm)
	6" and Larger	+5/32"(4.0mm) -1/32"(0.8mm)
Diameter of Contact Face	1/16" Raised Face	±1/32"(0.8mm)
	1/4" Raised Face Tongue & Groove Male & Female	±1/64"(0.4mm)
Diameter of Counterbore	Same as for Inside Diameter	
Drilling	Bolt Circle	±1/6"(1.6mm)
	Bolt Hole Spacing	±1/32"(0.8mm)
	Eccentricity of Bolt Circle with Respect to Facing	2 1/2" & Smaller 1/32"(0.8mm) Max. 3" & Larger 1/16"(1.6mm) Max.
	Eccentricity of Bolt Circle with Respect to Bore	1/32"(0.8mm) Max.*
	Eccentricity of Bolt Circle with Respect to Bore	1/32"(0.8mm) Max.*
Thickness	18" and Smaller	+1/8"(3.2mm), -0"
	20" and Larger	+3/16"(4.8mm), -0"
Length Thru Hub	10" and Smaller	±1/16"(1.6mm)
	12" and Larger	±1/8"(3.2mm)

WELDING NECK FLANGE

Outside Diameter	When O.D.is 24" or Less	±1/16"(1.6mm)
	When O.D.is Over 24"	±1/8"(3.2mm)
Inside Diameter	10" and Smaller	±1/32"(0.8mm)
	12" thru 18"	±1/16"(1.6mm)
	20" and larger	+1/8" (3.2mm) -1/16"(1.6mm)
Diameter of Contact Face	1/16" Rised Face	±1/32"(0.8mm)
	1/4" Raised Face Tongue & Groove Male & Female	±1/64"(0.4mm)
Diameter of Hub at Base	When Hub Base is Over 24" Smaller	±1/16"(1.6mm)*
	When Hub Base is Over 24"	±1/8"(3.2mm)*
Diameter of Hub at Point of Welding	5" and Smaller	+3/32"(2.4mm) -1/32"(0.8mm)
	6" and Larger	+5/32"(4.0mm) -1/32"(0.8mm)
Drilling	Bolt Circle	±1/6"(1.6mm)
	Bolt Hole Spacing	±1/32"(0.8mm)
	Eccentricity of Bolt Circle with Respect to Facing	2 1/2" & Smaller 1/32"(0.8mm) Max. 3" & Larger 1/16"(1.6mm) Max.
	Eccentricity of Bolt Circle with Respect to Bore	1/32"(0.8mm) Max.*
	Eccentricity of Facing with Respect to Bore	1/32"(0.8mm) Max.*
Thickness	18" and Smaller	+1/8"(3.2mm), -0"
	20" and Larger	+3/16"(4.8mm), -0"
Length Thru Hub	10" and Smaller	±1/16"(1.6mm)
	12" and Larger	±1/8"(3.2mm)

Notes *This tolerance is not specified in ANSI B16.5, but maker's option.

FLANGES FACINGS

DIMENSIONS OF FLANGE FACINGS

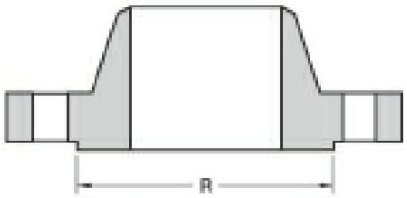

RAISED FACE

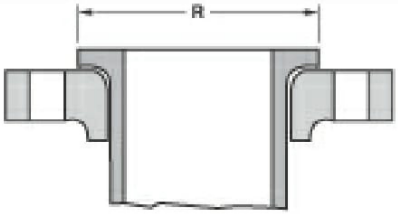

LAPPED JOINT

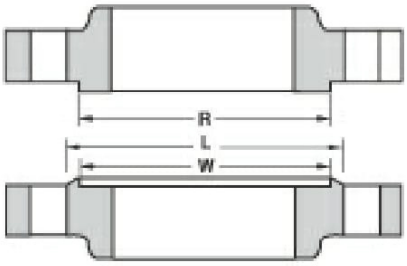

LARGE MALE-FEMALE

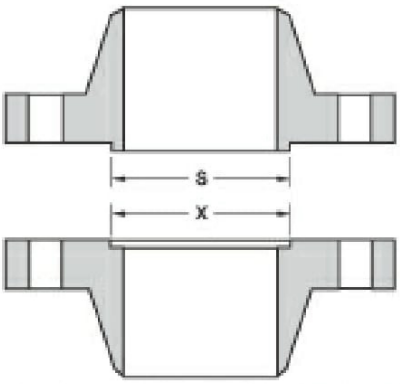

SMALL MALE AND FEMALE

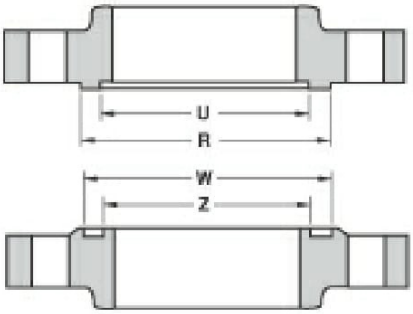

LARGE TONGUE AND GROOVE

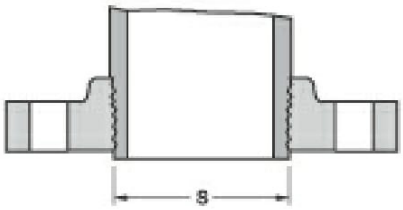

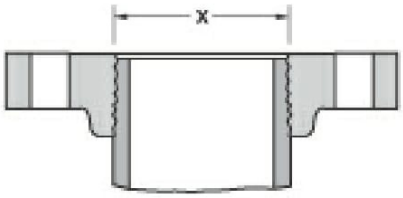

SMALL MALE AND FEMALE

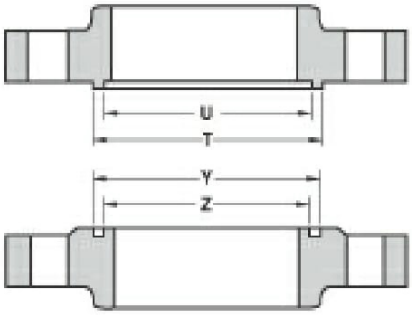

SMALL TONGUE AND GROOVE

FLAT FACE

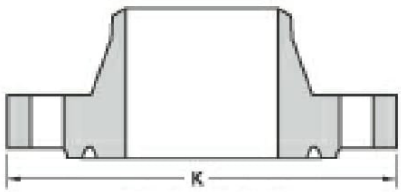

RING JOINT

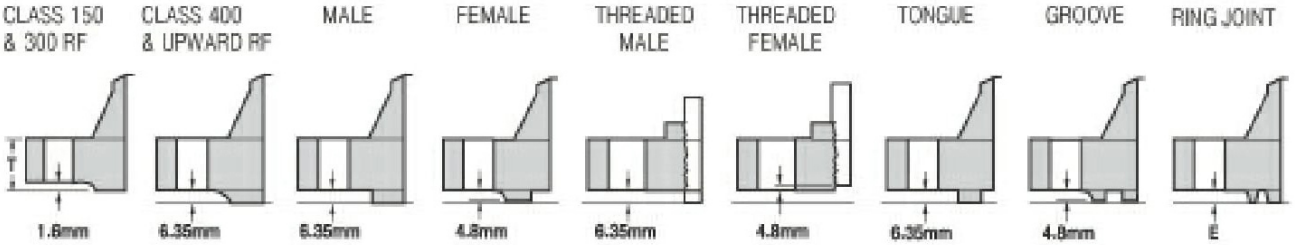

ANSI B16.5 FORGED FLANGES

Unit : mm

Nominal Pipe Size	Outside Diameter: Raised Face, Lapped, Large Male and Large Togue (R)	Outside Diameter: Small Male (S)	Outside Diameter: Small Tongue (T)	Large Female and Large Tongue (U)	Outside Diameter: Large Female and Large Groove (W)	Outside Diameter: Large Female and Large Groove (L)	Outside Diameter: Small Female (X)	Outside Diameter: Small Groove (Y)	I.D of Large and Groove (Z)	Height: Raised Face, and 300 Standard	Height: Raised Face, Large and Small Male and Tongue Classes 400-2500 Standard	Depth of Groove or Female
1/2	35.1	18.3	35.1	25.4	36.6	46.0	19.8	36.6	23.9	1.5	6.4	4.8
3/4	42.9	23.9	42.9	33.3	44.5	53.8	25.4	44.5	31.8	1.5	6.4	4.8
1	50.8	30.2	47.8	38.1	52.3	62.0	31.8	49.3	36.6	1.5	6.4	4.8
1 1/4	63.5	38.1	57.2	47.8	65.0	74.7	39.6	58.7	46.0	1.5	6.4	4.8
1 1/2	73.2	44.5	63.5	53.8	74.7	84.1	46.0	65.0	52.3	1.5	6.4	4.8
2	91.9	57.2	82.6	73.2	93.7	103.1	58.7	84.1	71.4	1.5	6.4	4.8
2 1/2	104.6	68.3	95.3	85.9	106.4	115.8	69.9	96.8	84.1	1.5	6.4	4.8
3	127.0	84.1	117.3	108.0	128.5	138.2	85.9	119.1	106.4	1.5	6.4	4.8
3 1/2	139.7	96.8	130.0	120.7	141.2	150.9	98.6	131.8	119.1	1.5	6.4	4.8
4	157.2	109.5	144.5	131.8	158.8	168.1	111.3	146.1	130.0	1.5	6.4	4.8
5	185.7	136.7	173.0	160.3	187.5	196.9	138.2	174.8	158.8	1.5	6.4	4.8
6	215.9	162.1	203.2	190.5	217.4	227.1	163.6	204.7	189.0	1.5	6.4	4.8
8	269.7	212.9	254.0	238.3	271.5	280.9	214.4	255.5	236.5	1.5	6.4	4.8
10	323.9	266.7	304.8	285.8	325.4	335.0	268.2	306.3	284.2	1.5	6.4	4.8
12	381.0	317.5	362.0	342.9	382.5	392.2	319.0	363.5	341.4	1.5	6.4	4.8
14	412.8	349.3	393.7	374.7	414.3	423.9	350.8	395.2	373.1	1.5	6.4	4.8
16	469.9	400.1	447.5	425.5	471.4	481.1	401.6	449.3	423.9	1.5	6.4	4.8
18	533.4	450.9	511.0	489.0	534.9	544.6	452.4	512.8	487.4	1.5	6.4	4.8
20	584.2	501.7	558.8	533.4	585.7	595.4	503.2	560.3	531.9	1.5	6.4	4.8
24	692.2	603.3	666.8	641.4	693.7	703.3	604.8	668.3	639.8	1.5	6.4	4.8

Notes:

(1) Small male and female faces are not applicable to Slip-on Flange.

(2) Large male and female faces are not applicable to Class 150 Flange.

(3) For flanges of Class 150 and 300 where they art to be bolted to ANSI Class 125 and 250 cast-Iron Flanges or required with flat face, flat face can be made by removing raised face.

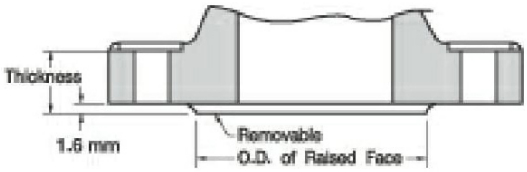

Tolerances are ±0.03"(+0.8mm) for 0.06"(1.6mm)RF and ±0.02"(+0.5mm) for 0.25"(6.35mm)RF
Large Male and Large Tongue

THREAD

THREAD AND STANDARDS FOR ANSI FLANGES (ANSI B2.1)

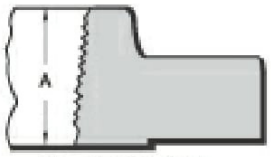

Class 150 Standard
with 1.6mm Raised Face

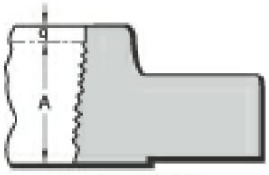

Class 300 Standard
with 1.6mm Raised Face

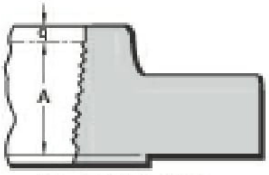

Class 400 Standard
and Heavier
with 5.35mm Raised or Male Face

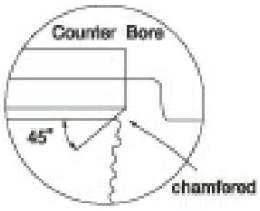

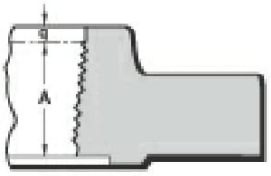

All Standards
with Female Face

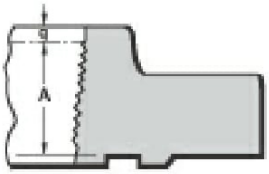

All Standards
with Groove Face

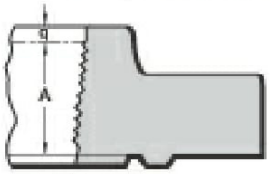

All Standards
with Ring Joint Face

ANSI B16.5 FORGED FLANGES

Unit : mm

Nominal Pipe Size	A-THREAD LENGTHS						
	Class 150	Class 300	Class 400	Class 600	Class 900	Class 1500	Class 2500
1/2	15.9	15.9	15.9	15.9	22.2	22.2	28.6
3/4	15.9	15.9	15.9	15.9	25.4	25.4	31.8
1	17.5	17.5	17.5	17.5	28.6	28.6	34.9
1 1/4	20.7	20.7	20.7	20.7	30.2	30.1	38.1
1 1/2	22.2	22.2	22.2	22.2	31.8	31.8	44.5
2	25.4	28.6	28.6	28.6	38.1	38.1	50.8
2 1/2	28.6	31.8	31.8	31.8	47.6	47.6	57.2
3	30.1	31.8	34.9	34.9	41.3	50.8	63.5
3 1/2	31.8	36.5	39.7	39.7			
4	33.4	36.5	36.5	41.3	47.6	57.2	69.9
5	36.5	42.9	42.9	47.6	54.0	63.5	76.2
6	39.7	46.1	46.1	50.8	57.2	69.9	82.6
8	44.5	50.8	50.8	60.3	63.5	76.2	95.3
10	49.2	55.6	55.6	65.1	71.5	84.2	108.0
12	55.6	60.3	60.3	69.9	76.2	92.1	120.7
14	57.2	63.5	63.5	73.0	82.6		
16	63.5	68.3	68.3	77.8	85.7		
18	68.3	69.9	69.9	79.4	88.9		
20	69.9	73.0	73.0	82.6	92.1		
24	82.6	82.6	82.6	92.1	101.6		

Notes:

(1) Except flanges with Small Male/Female Face(on pipe end), threaded flanges, have an American National Standard taper pipe thread conforming to ANSI B2.1

(2) The thread is concentric with the axis of the flange and variations in alignment do not exceed 0.06" (1.6mm) in. per foot(0.5%).

(3) Class 150 flanges are made without counterbore. The threads are chamfered approximately to the major diameter of the thread at the back of the flange at an angle of approximately 45 degress with the axis of the thread. The chamfer is concentric with the thread and included in the measurement of the thread length.

(4) Class 300 and higher pressure flanges are made with a counterbore at the back of the flange. The threads are chamfered to the diameter of the counterbore at an angle of approximately 45 degress with the axis of the thread. The counterbore and chamfer are concentric with the thread.

(5) The minimum length of effective thread in reducing flanges is at least equal to dimension Q of the corresponding class of threaded flanges as shown in the above tables. Threads do not necessarily extend to the face to the flange.

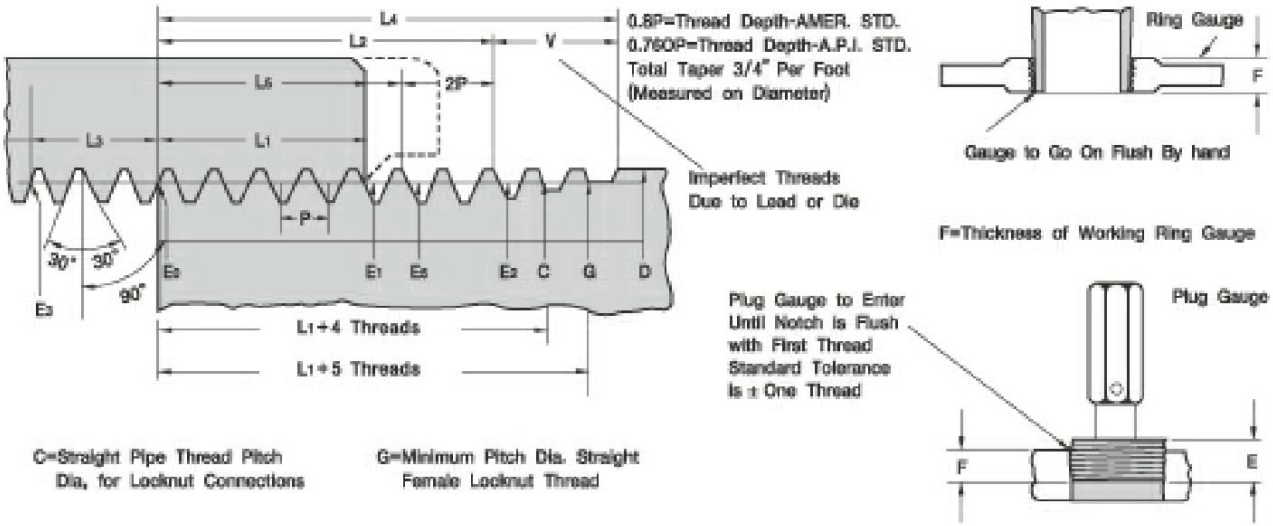

C=Straight Pipe Thread Pitch Dia, for Locknut Connections

G=Minimum Pitch Dia. Straight Female Locknut Thread

ANSI B16.5 FORGED FLANGES

Unit : mm

Nominal Pipe Size	Outside Diameter of Pipe	Threade Per inch	Pitch of Thread	Pitch Diameter Beginning of External Threads	Hondtight Engagement		Effective Thread External		Wrench Make – Up Length for internal Threaded		Over all Length External Thread
					Length	Pitch Diameter	Length	Pitch Diameter	Length	Pitch Diameter	
	D	N	P	E_3	L_1	E_1	L_2	E_2	L_3	E_3	L_4
1/2	21	14	1.8	19.3	8.1	19.8	13.6	20.1	5.4	18.9	19.9
3/4	27	14	1.8	24.6	8.6	25.1	13.9	25.4	5.4	24.2	20.2
1	33	11 1/2	2.2	30.8	10.2	31.5	17.3	31.9	6.6	30.4	25.0
1 1/4	42	11 1/2	2.2	39.6	10.7	40.2	18.0	40.7	6.6	39.1	25.6
1 1/2	48	11 1/2	2.2	45.6	10.7	46.3	18.4	46.8	6.6	45.2	26.0
2	60	11 1/2	2.2	57.6	11.1	58.3	19.2	58.8	6.6	57.2	26.9
2 1/2	73	8	3.2	69.1	17.3	70.2	28.9	70.9	6.4	68.7	39.9
3	89	8	3.2	84.9	19.5	86.1	30.5	86.8	6.4	84.5	41.5
3 1/2	102	8	3.2	97.5	20.9	98.8	31.8	99.5	6.4	97.1	42.8
4	114	8	3.2	110.1	21.4	111.4	33.0	112.2	6.4	109.7	44.0
4 1/2	127	8	3.2	122.7	22.2	124.1	34.3	123.0			
5	141	8	3.2	136.9	23.8	138.4	35.7	139.2	6.4	136.5	46.7
6	168	8	3.2	163.7	24.3	165.3	38.4	166.1	6.4	163.3	49.4
7	194	8	3.2	189.0	25.4	190.6	41.0	189.3			
8	219	8	3.2	214.2	27.0	215.9	43.5	216.9	6.4	213.8	54.5
9	244	8	3.2	239.5	28.7	241.2	46.0	239.8			
10	273	8	3.2	267.9	30.7	269.8	48.9	270.9	6.4	267.5	59.9
11	298	8	3.2	293.1	32.6	295.1	51.4	293.5			
12	324	8	3.2	318.3	34.5	320.5	54.0	321.7	6.4	317.9	65.0
14	356	8	3.2	349.9	39.7	352.4	57.2	353.5	6.4	349.5	68.2
15	381	8	3.2	375.1	42.8	377.8	59.7	375.6			
16	406	8	3.2	400.4	46.0	403.2	62.2	404.3	6.4	400.0	73.2
17	432	8	3.2	425.6	48.3	428.6	64.8	426.1			
18	457	8	3.2	450.9	50.8	454.0	67.3	455.1	6.4	450.5	78.3
20	508	8	3.2	501.3	54.0	504.7	72.4	505.9	6.4	500.9	83.4
24	610	8	3.2	602.3	60.3	606.1	82.6	607.5	6.4	601.9	93.6

WELDING ENDS

ANSI B16.5 FORGED FLANGES

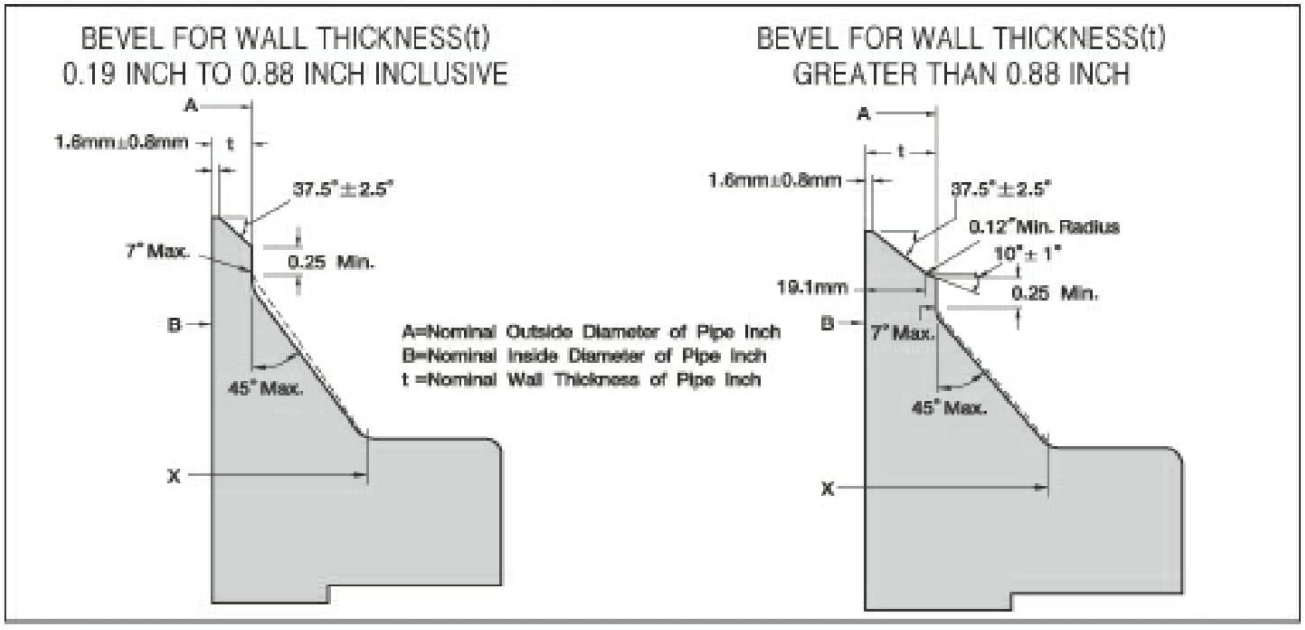

Notes:

When the thickness of the hub at the bevel is greater than of the pipe to which the flanges is joined and the additional thickness is provied on the outside diameter, a taper weld having a slope not exceeding 1 to 3 may be employed or, alternatively, the greater outside diameter may be tapered, at the same maximm slope or less, from a point on the welding bevel equal to the O.D at the mating pipe. Similary, when the greater thickness is provided on the inside of the flange, it shall be taper-bored from the welding end at a slope not exceeding 1 to 3.

When flanges covrered by this standard are intended ofr services with light wall, higher strength pipe, the thickness of the hub at the bevel may be greater than that of the pipe to which the flange is joined. Under these conditions a single taper hub may be provided and the outside diameter of the hub at the base (Dimension X) may also be modified.
The additional thickness may be provided on either inside or outside or partially on each side, but the total additional thickness shall not exceed one-half times the nominal wall thickness of intended mating pipe.

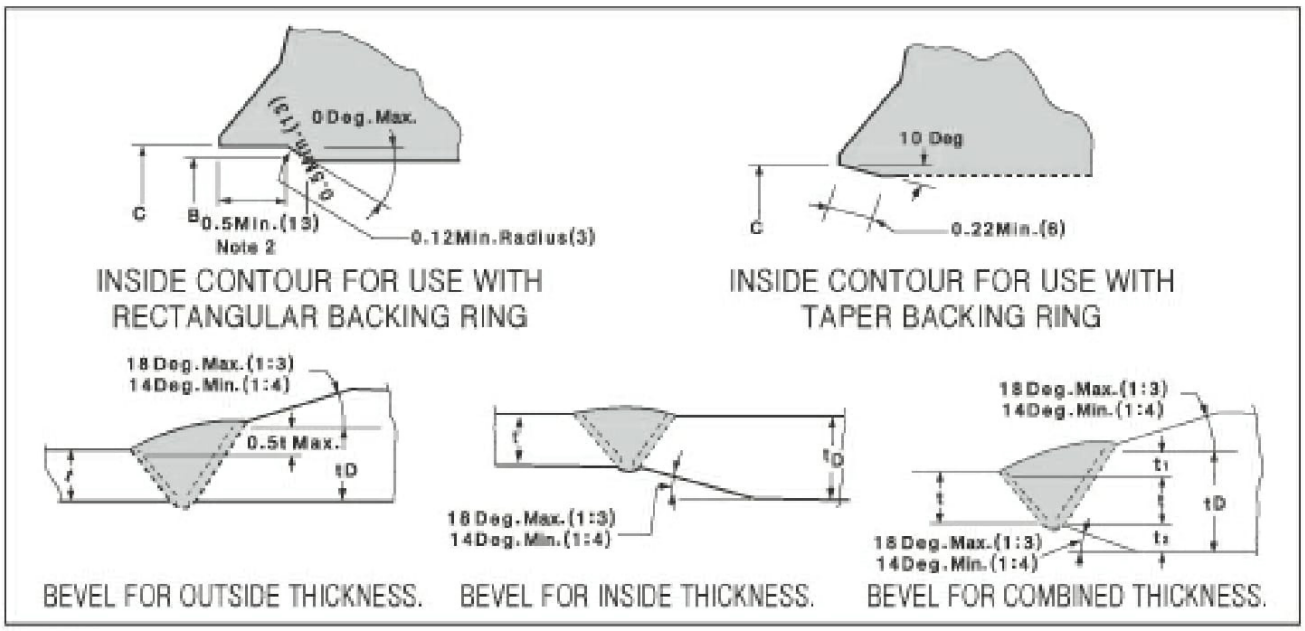

Notes:

(1) When the materials joined have equal minimum specified yield strength, there shall be no restriction on the minimum slope.
(2) Neither t_1,t_2, nor their sum (t_1+t_2) shall exceed 0.5t.
(3) When the minimum specified yield strengths of the sections to be joined are unequal, the value of to shall at least equalt time the ratio of minimum specified yield strength of the pipe to minimum specified yield strength of the flange.

API FLANGES

- Class 75 Flanges
- Class 150 Flanges
- Class 300 Flanges
- Finish & Tolerance

API 605 FORGED FLANGES

CLASS 75 FLANGES

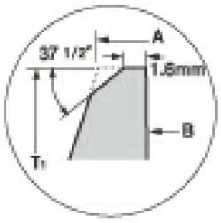

Detail "W"
Typical Welding end Preparation

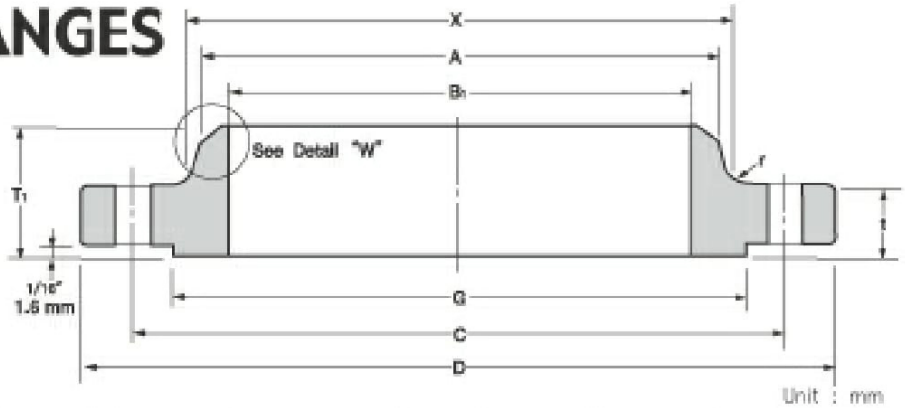

Unit : mm

Nominal Pipe Size	Outside Diam.	O.D of Raised Face	Diam. at Base of Hub	Thick-ness	Bore			Length Thru Hub	Diam. of Hub at Bevel	Radius at Base of Hub	Drilling			Approximate Weight Pounds(kg)
					Wall Thickness						Bolt Circle Diam.	Number of Holes	Diam. of Holes	
					6.35mm	9.5mm	12.7mm							
	D	G	X	t	B1			T1	A	r	C			
26	762	704.9	676.1	33.3	647.7	641.4	635.0	58.7	661.9	7.9	723.9	36	19.1	63.9 (29.01)
28	813	755.7	726.9	33.3	698.5	692.2	685.8	62.0	712.7	7.9	774.7	40	19.1	68.3 (31.01)
30	864	806.5	777.7	33.3	749.3	743.0	736.6	65.0	763.5	7.9	825.5	44	19.1	777.2 (35.05)
32	914	857.3	828.5	35.1	800.1	793.8	787.4	69.9	814.3	7.9	876.3	48	19.1	105.8 (48.03)
34	965	908.1	879.3	35.1	850.9	844.6	838.2	73.2	865.1	7.9	927.1	52	19.1	110.2 (50.03)
36	1034	965.2	935.0	36.6	850.9	895.4	889.0	85.9	915.9	9.7	992.1	40	22.4	136.7 (62.06)
38	1084	1016.0	985.8	38.1	952.5	946.2	939.8	88.9	966.7	9.7	1042.9	40	22.4	154.3 (70.05)
40	1135	1066.8	1036.6	38.1	1003.3	997.0	990.6	91.9	1017.5	9.7	1093.7	44	22.4	163.1 (74.05)
42	1186	1117.6	1087.4	39.6	1054.1	1047.8	1041.4	95.3	1068.3	9.7	1144.5	48	22.4	169.8 (77.09)
44	1251	1174.8	1140.0	42.9	1104.9	1049.4	1143.0	104.6	1119.1	9.7	1203.5	36	25.4	180.8 (82.08)
46	1302	1225.6	1190.8	44.5	1155.7	1149.4	1143.0	108.0	1169.9	9.7	1254.3	40	25.4	231.5 (105.01)
48	1353	1276.4	1241.6	46.0	1206.5	1200.2	1193.8	111.3	1220.7	9.7	1305.1	44	25.4	264.6 (120.03)
50	1403	1327.2	1293.9	47.8	1257.3	1251.0	1244.6	115.8	1271.5	9.7	1355.9	44	25.4	295.8 (134.28)
52	1457	1378.0	1344.7	47.8	1308.1	1301.8	1295.4	120.7	1322.3	9.7	1409.7	48	25.4	313.2 (142.18)
54	1508	1428.8	1397.0	49.3	1358.9	1352.6	1346.2	125.5	1373.1	9.7	1460.5	48	25.4	396.8 (180.15)
56	1575	1485.9	1450.8	50.8	1409.7	1403.4	1397.0	134.9	1423.9	11.2	1521.0	40	28.4	406.6 (184.58)
58	1626	1536.7	1501.6	52.3	1460.5	1454.2	1447.8	138.2	1474.7	11.2	1571.8	44	28.4	430.8 (195.56)
60	1676	1587.5	1552.4	55.6	1511.3	1505.0	1498.6	144.5	1525.5	11.2	1622.6	44	28.4	463.0 (210.20)

CLASS 150 FLANGES

Unit : mm

Nominal Pipe Size	Outside Diam.	O.D of Raised Face	Diam. at Base of Hub	Thick-ness	Bore			Length Thru Hub	Diam. of Hub at Bevel	Radius at Base of Hub	Drilling			Approximate Weight Pounds(kg)
					Wall Thickness						Bolt Circle Diam.	Number of Holes	Diam. of Holes	
					6.35mm	9.5mm	12.7mm							
	D	G	X	t	B1			T1	A	r	C			
26	786	711.2	684.3	41.1	647.7	641.4	635.0	88.9	661.9	9.7	744.5	36	22.4	114.6 (52.03)
28	837	762.0	735.1	44.5	698.5	692.2	685.8	95.3	712.7	9.7	795.3	40	22.4	127.9 (58.07)
30	887	812.8	787.4	44.5	749.3	743.0	736.6	100.1	763.5	9.7	846.1	44	22.4	143.3 (65.06)
32	941	863.6	839.7	46.0	800.1	793.8	787.4	108.0	814.3	9.7	900.2	48	22.4	187.4 (85.08)
34	1005	920.8	892.0	49.3	850.9	844.6	838.2	110.2	865.1	9.7	957.3	40	25.4	220.5 (100.11)
36	1057	971.6	944.6	52.3	901.7	895.4	889.0	117.3	915.9	9.7	1009.7	44	25.4	253.5 (115.09)
38	1124	1022.4	997.0	53.8	952.5	946.2	939.8	124.0	966.7	9.7	1069.8	40	28.4	297.5 (135.07)
40	1175	1079.5	1049.3	55.6	1003.3	997.0	990.6	128.5	1019.0	9.7	1120.6	44	28.4	330.7 (150.14)
42	1226	1130.3	1101.9	58.7	1054.1	1047.8	1041.4	133.4	1069.8	11.2	1171.4	48	28.4	363.8 (165.17)
44	1276	1181.1	1152.7	60.5	1104.9	1098.6	1092.2	136.7	1120.6	11.2	1222.2	52	31.8	440.9 (200.17)
46	1341	1234.9	1205.0	62.0	1155.7	1149.4	1143.0	144.5	1171.4	11.2	1284.2	40	31.8	463.0 (210.20)
48	1392	1289.1	1257.3	65.0	1206.5	1200.2	1193.8	149.4	1222.2	11.2	1335.0	44	31.8	529.1 (240.21)
50	1443	1339.9	1308.1	68.3	1257.3	1251.0	1244.6	153.9	1273.0	11.2	1385.8	48	31.8	552.4 (250.27)
52	1494	1390.7	1360.4	69.9	1308.1	1301.8	1295.4	157.2	1323.8	11.2	1436.6	52	31.8	585.9 (265.77)
54	1549	1441.5	1412.7	71.4	1358.9	1352.6	1346.2	162.1	1374.6	11.2	1492.3	56	31.8	683.4 (310.26)
56	1600	1492.3	1465.3	73.2	1409.7	1403.4	1397.0	166.6	1425.4	14.2	1543.1	60	31.8	674.8 (306.08)
58	1675	1543.1	1516.1	74.7	1460.5	1454.2	1447.8	174.8	1476.2	14.2	1611.4	48	35.1	810.6 (367.76)
60	1726	1600.2	1570.0	76.2	1511.3	1505.0	1498.6	179.3	1527.0	14.2	1662.2	52	35.1	903.9 (410.37)

Notes:
(1) 'Bore' (B1) of flanges is shall be specified by the purchaser.

CLASS 300 FLANGES

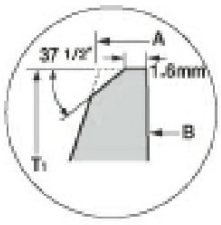

Detail "W"
Typical Welding end Preparation

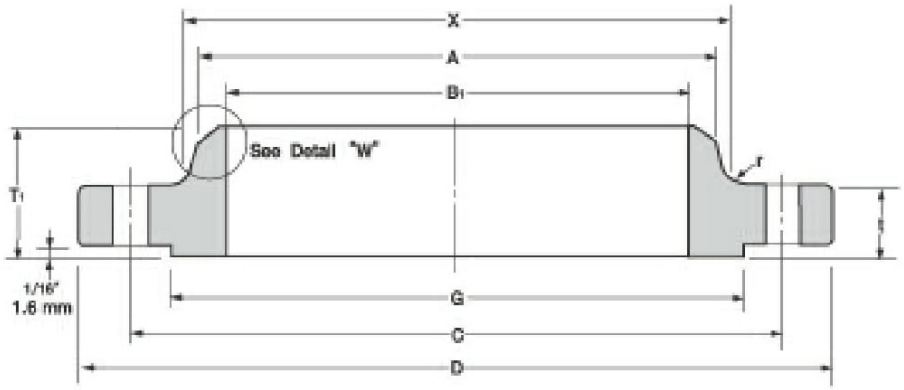

Unit : mm

Nominal Pipe Size	Outside Diam.	O.D of Raised Face	Diam. at Base of Hub	Diam. of Hub at Bevel	Bore Wall Thickness 6.35mm	Bore Wall Thickness 9.5mm	Bore Wall Thickness 12.7mm	Length Thru Hub	Thick-ness	Radius at Base of Hub	Drilling Bolt Circle Diam.	Drilling Number of Holes	Drilling Diam. of Holes	Approximate Weight Pounds(kg)
	D	G	X	A	B1			T1	t	r	C			
26	867	736.6	701.5	665.2	647.7	641.4	635.0	144.5	88.9	14.2	803.1	32	35.1	440.9 (200.17)
28	921	787.4	755.7	716.0	698.5	692.2	685.8	149.4	88.9	14.2	857.3	36	35.1	463.0 (210.20)
30	991	844.6	812.8	768.4	749.3	743.0	736.6	158.0	93.7	14.2	920.8	36	38.1	595.2 (270.22)
32	1054	901.7	863.6	819.2	800.1	793.8	787.4	168.1	103.1	15.7	977.9	32	41.1	727.5 (330.29)
34	1108	952.5	917.4	870.0	850.9	844.6	838.2	173.0	103.1	15.7	1031.7	36	41.1	793.7 (360.34)
36	1171	1009.7	965.2	920.8	901.7	895.4	889.0	180.8	103.1	15.7	1089.2	32	44.5	903.9 (410.37)
38	1222	1060.5	1016.0	971.6	952.5	946.2	939.8	192.0	111.3	15.7	1140.0	36	44.5	1256.6 (570.50)
40	1273	1114.6	1066.8	1022.4	1003.3	997.0	990.6	198.4	115.8	15.7	1190.8	40	44.5	1455.0 (660.57)
42	1334	1168.4	1117.6	1074.7	1054.1	1047.8	1041.4	204.7	119.1	15.7	1244.6	36	47.8	1587.3 (720.63)
44	1384	1219.2	1173.2	1125.5	1104.9	1098.6	1092.2	214.4	127.0	15.7	1295.4	40	47.8	1763.7 (800.72)
46	1461	1270.0	1101.9	1176.3	1155.7	1149.4	1143.0	222.3	128.5	15.7	1365.3	36	50.8	2138.5 (970.88)
48	1511	1327.2	1277.9	1227.1	1206.5	1200.2	1193.8	223.8	128.5	15.7	1416.1	40	50.8	2182.5 (990.86)
50	1562	1378.0	1330.5	1277.9	1257.3	1251.0	1244.6	235.0	138.2	15.7	1466.9	44	50.8	2308.2 (1047.92)
52	1613	1428.8	1382.8	1328.7	1308.1	1301.8	1295.4	242.8	142.7	15.7	1517.7	48	50.8	2453.3 (1113.79)
54	1673	1479.6	1435.1	1379.5	1358.9	1352.6	1346.2	239.8	136.7	15.7	1577.8	48	50.8	2557.3 (1161.01)
56	1765	1536.7	1493.8	1422.4	1409.7	1403.4	1397.0	268.2	153.9	17.5	1651.0	36	60.5	2942.9 (133.601)
58	1827	1593.9	1547.9	1481.1	1460.5	1454.2	1447.8	274.6	153.9	17.5	1712.0	40	60.5	3144.5 (1427.60)
60	1878	1651.0	1598.7	1531.9	1511.3	1505.0	1498.6	271.5	150.9	17.5	1763.8	40	60.5	3196.7 (1451.30)

Notes:
(1) 'Bore' (B1) of flanges is shall be specified by the purchaser.

FINISH & TOLERANCE

API 605 FORGED FLANGES

1. Standard Finishes for Contact Face of Flanges

The flange face shall have a serrated finish consisting of 20 to 40 grooves per inch, 0.002 inch to 0.005 inch deep, cut spirally or concentrically with a round-nose tool.

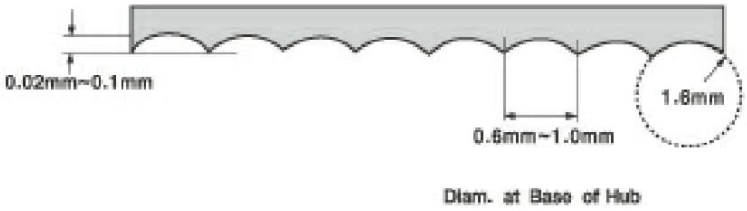

2. Dimensional Tolerances for API 605 Flanges

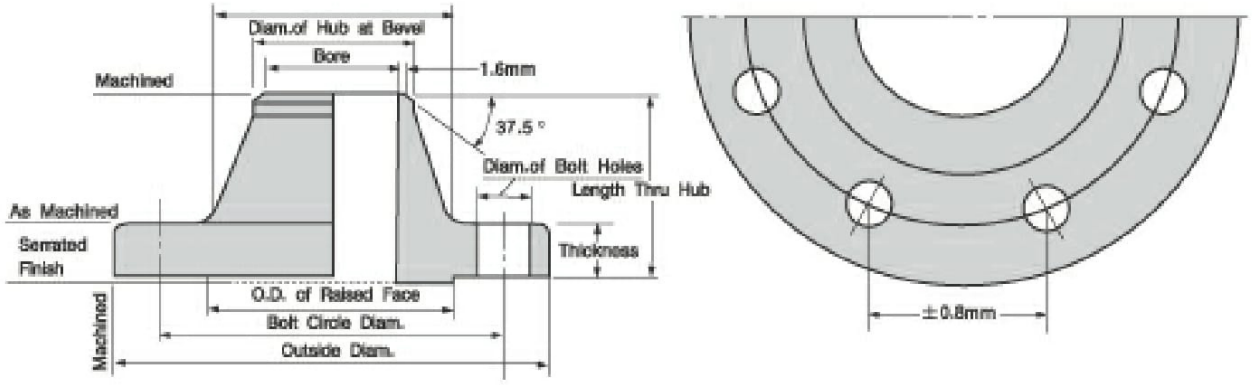

Dimension	Tolerance
Outsid diameter of raised face	±0.8mm
Flange thickness	+4.8mm,-0mm
Length thru hub	±3.0mm
Diam. of hub at bevel	+4.1mm,-0.8mm
Bolt circle diameter	±1.6mm
Center-to-center of adjacent bolt holes	±0.8mm
Bore	+3.0mm,-1.6mm
Outside diameter	±3.0mm
Diameter at base of Hub	±3.0mm

Notes:

(1) Flanges shall have bearing surfaces for bolting that are parallel to the flange face within 1 degree. Any back facing or spot facing required to accomplish parallelism between the flange face and nut bearing surface on the back of the flange shall not reduce the flange thickness.

(2) Tolerances for the welding end of a welding neck flange shall be in conformance with ANSI B16.25

(3) Other tolerances than specified the table shall be in accordance with ANSI B16.5.

(4) The flange shall be either back-faced or spot-faced at the bolt-holes on the flange back if the nut bearing surface at the back of the flange is not parallel with the flange face within the tolerances listed in Note (1), if the fillet at the hub interferes with the nut bearing surface or if the flange thickness exceeds the minimum required thickness by more than 0.19 inch (4.8mm). The nut bearing surface is the spot-facing diameter at the bolt-holes as given in MSS SP-9. Spot-facing shall be in accordance with MSS SP-9

(5) Tolerances marked * are not covered in API 605.

API 590 FIG.8

CLASS 150LB, 300LB RAISED FACE
CLASS 600LB, 900LB RAISED FACE
CLASS 1500LB, 2500LB RAISED FACE

API 590 FIG.8

CLASS 150LB, 300LB RAISED FACE

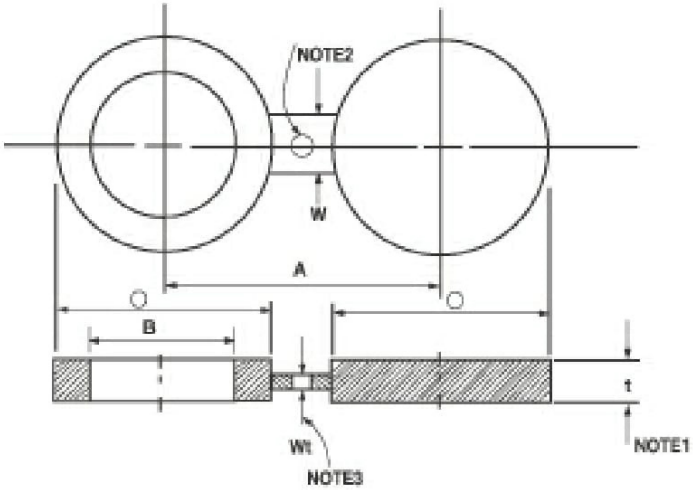

Unit : mm

SIZE	150LB					300LB				
	B	O	A	t	W	B	O	A	t	W
1/2	16	44	60	3	38	16	51	67	6	38
3/4	21	54	70	3	38	21	64	83	6	38
1	27	64	79	3	38	27	70	89	6	38
1 1/4	42	73	89	6	38	42	79	99	6	38
1 1/2	48	83	99	6	38	48	92	114	6	51
2	60	102	121	6	51	60	108	127	10	51
2 1/2	73	121	140	6	51	73	127	149	10	64
3	89	133	152	6	64	89	146	168	10	64
3 1/2	102	159	178	10	64	102	162	184	13	64
4	114	171	190	10	64	114	178	200	13	64
5	141	194	216	10	76	141	213	235	16	76
6	168	219	241	13	76	168	248	270	16	76
8	219	276	298	13	76	219	305	330	22	89
10	273	337	362	16	102	273	359	387	25	102
12	324	406	432	19	102	324	419	451	28	102
14	356	446	476	19	108	356	483	514	32	121
16	406	511	540	22	108	406	537	572	38	124
18	457	546	578	25	114	457	594	629	41	114
20	508	603	635	28	121	508	651	686	44	121
24	610	714	749	32	140	610	772	813	51	140

Notes:

1. Thickness(dimension t)includes a corrosion allowance of 0.05 inch (1.3mm)for material groups 1.1, 1.7, 1.9, 1.10 and 1.12 Corrosion allowance is 0.00 inch for meterial groups 2.1, 2.2, 2.4 and 2.5.
2. Hole size (where required due to bolt spacing)shall be the same as the flange bolt hole.
3. The thickness of the web (or tie bar) dimension Wt, shall be 0.25 inch (6.35mm) minimum, except when t is less than 0.25 inch, Wt shall equal t.

API 590 FIG.8

CLASS 600LB, 900LB RAISED FACE

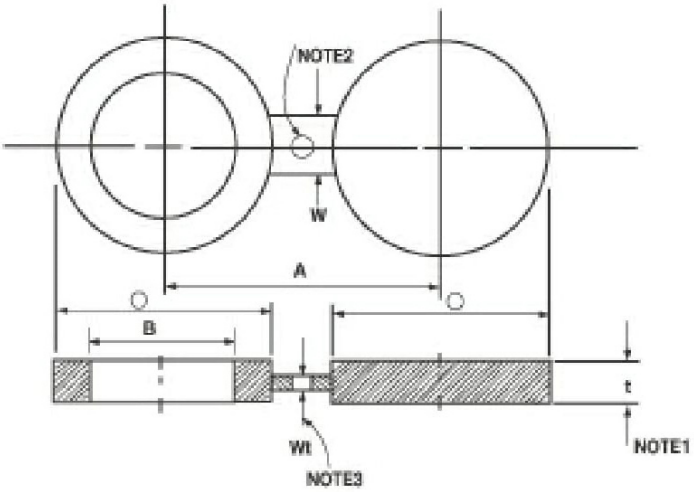

Unit : mm

SIZE	600LB					900LB				
	B	O	A	t	W	B	O	A	t	W
1/2	16	51	67	6	38	16	60	83	6	38
3/4	21	64	83	6	38	21	67	89	6	41
1	27	70	89	6	57	27	76	102	6	57
1 1/4	37	79	99	10	57	37	86	111	10	57
1 1/2	43	92	114	10	57	43	95	124	10	57
2	55	108	127	10	67	55	140	165	13	67
2 1/2	67	127	149	13	67	67	162	190	13	67
3	83	146	168	13	67	83	165	190	16	67
3 1/2	96	159	184	16	76	–	–	–	–	–
4	108	191	216	16	76	108	203	235	19	76
5	135	238	267	19	86	135	244	279	22	86
6	162	264	292	22	86	162	286	318	25	86
8	212	318	349	28	95	212	356	394	35	95
10	265	397	432	35	105	265	432	470	41	105
12	315	454	489	41	105	315	495	533	48	105
14	346	489	527	44	114	346	518	559	54	114
16	397	562	603	51	124	397	572	616	60	124
18	448	610	654	54	133	448	635	686	67	133
20	497	679	724	64	133	497	695	749	73	133
24	597	787	838	73	152	597	835	902	89	152

Notes:

1. Thickness(dimension *t*) includes a corrosion allowance of 0.05 inch (1.3mm)for material groups 1.1, 1.7, 1.9, 1.10 and 1.12 Corrosion allowance is 0.00 inch for meterial groups 2.1, 2.2, 2.4 and 2.5.
2. Hole size (where required due to bolt spacing)shall be the same as the flange bolt hole.
3. The thickness of the web (or tie bar) dimension *Wt*, shall be 0.25 inch (6.35mm) minimum, except when *t* is less than 0.25 inch, *Wt* shall equal t.

API 590 FIG.8

CLASS 1500LB, 2500LB RAISED FACE

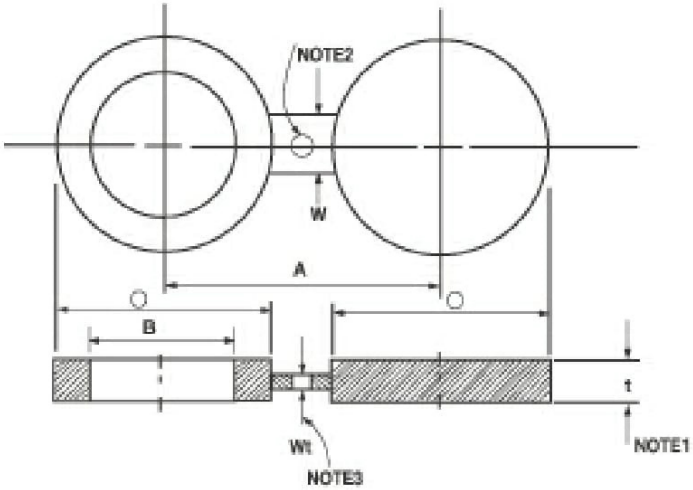

Unit : mm

SIZE	1500LB					2500LB				
	B	O	A	t	W	B	O	A	t	W
1/2	16	60	83	6	38	16	67	89	10	38
3/4	21	67	89	10	41	21	73	95	10	41
1	27	76	102	10	64	27	83	108	10	64
1 1/4	35	86	111	10	64	35	102	130	13	64
1 1/2	41	95	124	13	70	41	114	146	16	70
2	53	140	165	13	70	53	143	171	16	70
2 1/2	63	162	190	16	76	63	165	197	19	76
3	78	171	203	19	76	78	194	229	22	76
4	102	206	241	22	89	102	232	273	28	89
5	128	251	292	28	89	128	276	324	35	89
6	154	279	318	35	89	154	314	368	41	89
8	203	349	394	41	102	198	384	438	54	102
10	255	432	483	51	114	248	473	540	67	114
12	303	518	572	60	114	289	546	619	79	114
14	333	575	635	67	127	–	–	–	–	–
16	381	638	705	76	133	–	–	–	–	–
18	429	702	775	86	146	–	–	–	–	–
20	478	752	832	95	152	–	–	–	–	–
24	575	899	991	111	178	–	–	–	–	–

Notes:

1. Thickness(dimension t)includes a corrosion allowance of 0.05 inch (1.3mm)for material groups 1.1, 1.7, 1.9, 1.10 and 1.12 Corrosion allowance is 0.00 inch for meterial groups 2.1, 2.2, 2.4 and 2.5.
2. Hole size (where required due to bolt spacing)shall be the same as the flange bolt hole.
3. The thickness of the web (or tie bar) dimension Wt, shall be 0.25 inch (6.35mm) minimum, except when t is less than 0.25 inch, Wt shall equal t.

MSS FLANGES

- Class 150 Flanges
- Class 300 Flanges
- Class 400 Flanges
- Class 600 Flanges
- Class 900 Flanges

CLASS 150 FLANGES

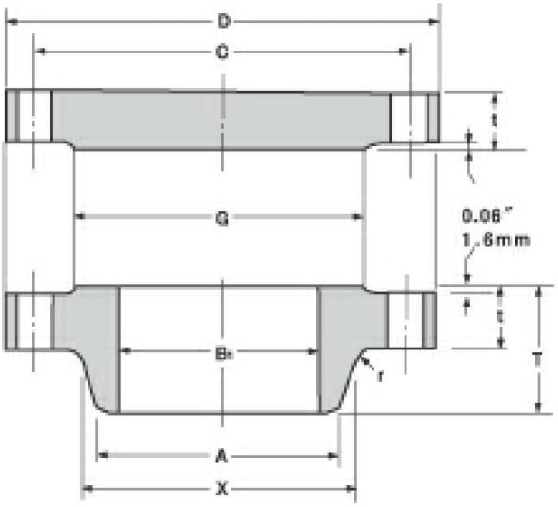

MSS

MSS SP44 FORGED FLANGES

Unit : mm

Nominal Pipe Size	Outside Diam.	O.D.of Raised Face	Diam. at Base of Hub	Thick-ness	Bore Wall Thickness 9.5mm	Bore Wall Thickness 12.7mm
	D	G	X	t	B1	
12	483	381.0	365.3	31.8	304.8	298.5
14	533	412.8	400.1	35.1	336.6	330.2
16	597	469.9	457.2	36.6	387.4	381.0
18	635	533.4	505.0	39.6	438.2	431.8
20	699	584.2	558.8	42.9	489.0	482.6
22	749	641.4	609.6	46.0	539.8	533.4
24	813	692.2	663.4	47.8	590.6	584.2
26	870	749.3	676.1	68.3	641.4	635.0
28	927	800.1	726.9	71.4	692.2	685.8
30	984	857.3	781.1	74.7	743.0	736.6
32	1060	914.4	831.9	80.8	793.8	787.4
34	1111	965.2	882.7	82.6	844.6	838.2
36	1168	1022.3	933.5	90.4	895.4	889.0
38	1238	1073.4	990.6	87.4	946.2	939.8
40	1289	1124.0	1041.4	90.4	997.0	990.6
42	1346	1193.8	1092.2	96.8	1047.8	1041.4
44	1403	1244.6	1143.0	101.6	1098.6	1092.2
46	1454	1295.4	1196.8	103.1	1149.4	1143.0
48	1511	1358.9	1247.6	108.0	1200.2	1193.8
50	1568	1409.7	1301.8	111.3	1251.0	1244.6
52	1626	1460.5	1352.6	115.8	1301.8	1295.4
54	1683	1511.3	1403.4	120.7	1352.6	1346.2
56	1746	1574.8	1457.5	124.0	1403.4	1397.0
58	1803	1625.6	1508.3	128.5	1454.2	1447.8
60	1854	1676.4	1559.1	131.8	1505.0	1498.6

Notes:

(1) For the 'Bore' (B_1)other than wall thickness 0.375"(9.5mm) and 0.500"(12.7mm), refer to page 92.

(2) Class 150 flanges will be furnished with 0.06"(1.6mm) raised face, which is included in "Thickness" (t) and 'Length through Hub' (T_1).

(3) Diamensional tolerance are in accordance with ANSI B16.5.

WELDING-ENDS FOR WELDING-NECK FLANGES

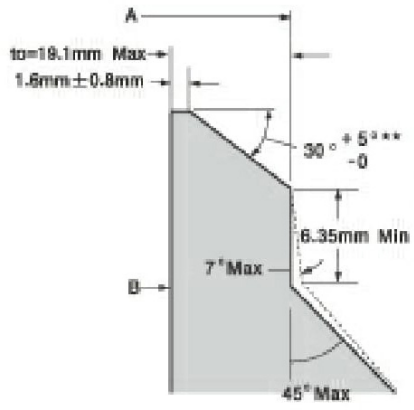

Notes:
*Or 1 inch at manufacturer's option.
**Flanges size 24"(609.6mm) and smaller may be furnished with 37-1/2° bevel at manufacturer's option

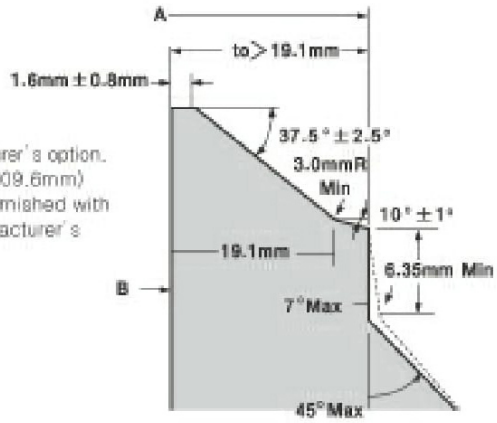

Bevel For Wall Thickness 0.75"in.(20mm) or Less

Bevel For Wall Thickness Greater than 0.75"in.(20mm)

Unit : mm

Nominal Pipe Size	Length thru Hub	Diam. of Hub Bevel	Radius of Fillet	Drilling		
				Bolt Circle Diam.	Number of Holes	Diam. of Holes
	T1	A	r	C		
12	114.3	323.9	9.7	431.8	12	25.4
14	127.0	355.6	9.7	476.3	12	28.4
16	127.0	406.4	9.7	539.8	16	28.4
18	139.7	457.2	9.7	577.9	16	31.8
20	144.5	508.0	9.7	635.0	20	31.8
22	149.4	558.8	9.7	692.2	20	35.1
24	152.4	609.6	9.7	749.3	20	35.1
26	120.7	To specified by Purchaser.	9.7	806.5	24	35.1
28	125.5		11.2	863.6	28	35.1
30	136.7		11.2	914.4	28	35.1
32	144.5		11.2	977.9	28	41.1
34	149.4		12.7	1028.7	32	41.1
36	157.0		12.7	1085.9	32	41.1
38	157.2		12.7	1149.4	32	41.1
40	163.6		12.7	1200.2	36	41.1
42	171.5		12.7	1257.3	36	41.1
44	177.8		12.7	1314.5	40	41.1
46	185.7		12.7	1365.3	40	41.1
48	192.0		12.7	1422.4	44	41.1
50	203.2		12.7	1479.6	44	47.8
52	209.6		12.7	1536.7	44	47.8
54	215.9		12.7	1593.9	44	47.8
56	228.6		12.7	1651.0	48	47.8
58	235.0		12.7	1708.0	48	47.8
60	239.8		12.7	1759.0	52	47.8

(4) Maximum Pressure Rating for raised face flanges is 285 psi(19.5 BARS) at atmospheric temperature.
(5) Flange dimension of size 12" through 24" flanges(except 22" are in accordance with ANSI B16.5.

MSS

CLASS 300 FLANGES

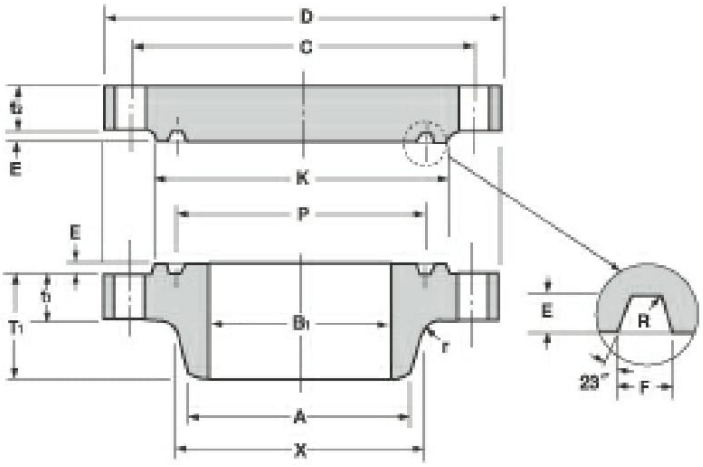

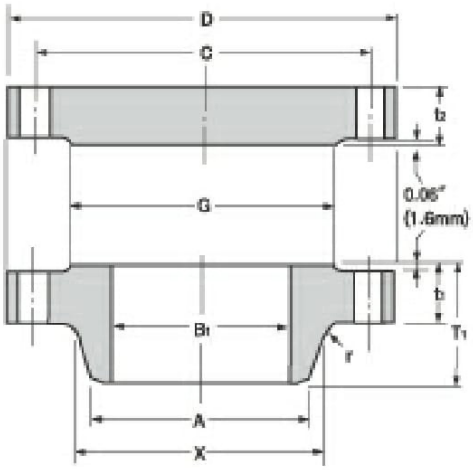

MSS

MSS SP44 FORGED FLANGES

Unit : mm

Nominal Pipe Size	Outside Diam.	O.D.of Raised Face	Diam. at Base of Hub	Thickness		Bore Wall Thickness		Length Thru Hub	Diam. of Hub at Bevel	Radius of Fillet
				Welding Neck	Blind	9.5mm	12.7mm			
	D	G	X	t1	t2	B1		T1	A	r
12	521	381.0	374.7	50.8	50.8	304.8	298.5	130.0	323.9	9.7
14	584	412.8	425.5	53.8	53.8	336.6	330.2	142.7	355.6	9.7
16	648	469.9	482.6	57.2	57.2	387.4	381.0	146.1	406.4	9.7
18	711	533.4	533.4	60.5	60.5	438.2	431.8	158.8	457.2	9.7
20	775	584.2	587.2	63.5	63.5	489.0	482.6	162.1	508.0	9.7
22	838	641.4	641.4	66.5	66.5	539.8	533.4	165.1	558.8	9.7
24	914	692.2	701.5	69.9	69.9	590.6	584.2	168.1	609.6	9.7
26	972	749.3	720.9	79.2	84.1	641.4	635.0	184.2	666.8	9.7
28	1035	800.1	774.7	85.9	90.4	692.2	685.8	196.9	717.6	11.2
30	1092	857.3	827.0	91.9	96.3	743.0	736.6	209.6	768.4	11.2
32	1149	914.4	881.1	98.6	100.1	793.8	787.4	222.3	819.2	11.2
34	1207	965.2	936.8	101.6	104.6	844.6	838.2	231.6	871.7	12.7
36	1270	1022.4	990.6	104.6	111.3	895.4	889.0	241.3	922.5	12.7
38	1168	1028.7	993.6	108.0	108.0	946.2	939.8	180.8	–	12.7
40	1238	1085.9	1047.8	114.3	114.3	997.0	990.6	193.5	–	12.7
42	1289	1136.7	1098.6	119.1	119.1	1047.8	1041.4	200.2	To be specified by purchaser.	12.7
44	1353	1193.8	1149.4	124.0	124.0	1098.6	1092.2	206.2		12.7
46	1416	1244.6	1203.5	128.5	128.5	1149.4	1143.0	215.9		12.7
48	1467	1301.8	1254.3	133.4	133.4	1200.2	1196.8	223.8		12.7
50	1530	1358.9	1305.1	139.7	139.7	1251.0	1244.6	231.6		12.7
52	1581	1409.7	1355.9	144.5	144.5	1301.8	1295.4	238.3		12.7
54	1657	1466.9	1409.7	152.4	152.4	1352.6	1346.2	252.5		12.7
56	1708	1517.7	1463.5	153.9	153.9	1403.4	1397.0	260.4		12.7
58	1759	1574.8	1514.3	158.8	158.8	1454.2	1447.8	266.7		12.7
60	1810	1625.6	1565.1	163.6	163.6	1505.0	1498.6	273.1		12.7

Notes:

(1) For the 'Bore' (B_1) other than wall thickness 0.375"(9.5mm) and 0.500"(12.7mm), refer to page 92.

(2) Class 300 flanges will be furnished with 0.06"(1.6mm) raised face, which is included in "Thickness" (t) and "Length through Hub" (T_1).

(3) Diamensional tolerance are in accordance with ANSI B16.5.

WELDING-ENDS FOR WELDING-NECK FLANGES

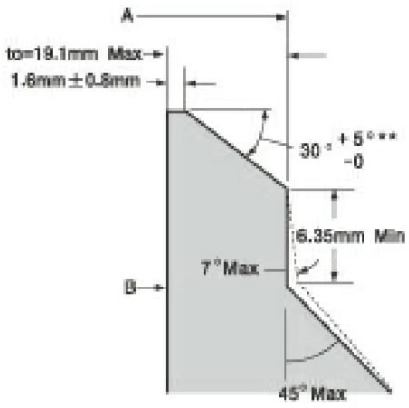

Notes:
*Or 1 inch at manufacturer's option.
**Flanges size 24" (609.6mm) and smaller may be furnished with 37-1/2° bevel at manufacturer's option

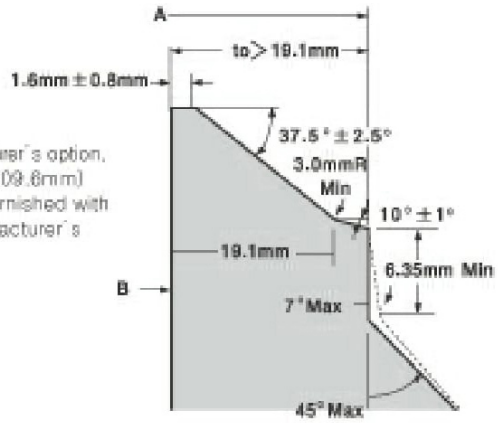

Bevel For Wall Thickness(to) 0.75"in.(20mm) or Less

Bevel For Wall Thickness(to) Greater than 0.75"in.(20mm)

Unit : mm

Nominal Pipe Size	Drilling			Pitch Diam.	Groove Dimensions			Diam. of Raised Face	Ring and Groove Number
	Bolt Circle Diam.	Number of Holes	Diam. of Holes		Width	Depth	Radius		
	C			P	F	E	R	K	
12	450.9	16	31.8	381.0	11.9	7.9	0.8	412.8	R57
14	514.4	20	31.8	419.1	11.9	7.9	0.8	457.2	R61
16	571.5	20	35.1	469.9	11.9	7.9	0.8	508.0	R65
18	628.7	24	35.1	533.4	11.9	7.9	0.8	574.5	R69
20	685.8	24	35.1	584.2	13.5	9.5	1.5	635.0	R73
22	743.0	24	41.1	635.0	15.1	11.1	1.5	685.8	R81
24	812.8	24	41.1	692.2	16.7	11.1	1.5	749.3	R77
26	876.3	28	44.5	749.3	19.8	12.7	1.5	809.8	R93
28	939.8	28	44.5	800.1	19.8	12.7	1.5	860.6	R94
30	997.0	28	47.8	857.3	19.8	12.7	1.5	917.4	R95
32	1054.1	28	50.8	914.4	23.0	14.3	1.5	984.3	R96
34	1104.9	28	50.8	965.2	23.0	14.3	1.5	1035.1	R97
36	1168.4	32	53.8	1022.4	23.0	14.3	1.5	1092.2	R98
38	1092.2	32	41.1						
40	1155.7	32	44.5						
42	1206.5	32	44.5						
44	1263.7	32	47.8						
46	1320.8	28	50.8						
48	1371.6	32	50.8						
50	1428.8	32	53.8						
52	1479.6	32	53.8						
54	1549.4	28	60.5						
56	1600.2	28	60.5						
58	1651.0	32	60.5						
60	1701.8	32	60.5						

(4) Maximum Pressure Rating for raised face flangs is 740 psi(51 BARS) at atmospheric temperature.
(5) Flange dimension of size 12" through 24" flanges(except 22" are in accordance with ANSI B16.5.
(6) For sizes 26" and larger 'Diameter of Hub at Bevel (A)' are in accordance with ASME Boiler and pressure vessel code.

CLASS 400 FLANGES

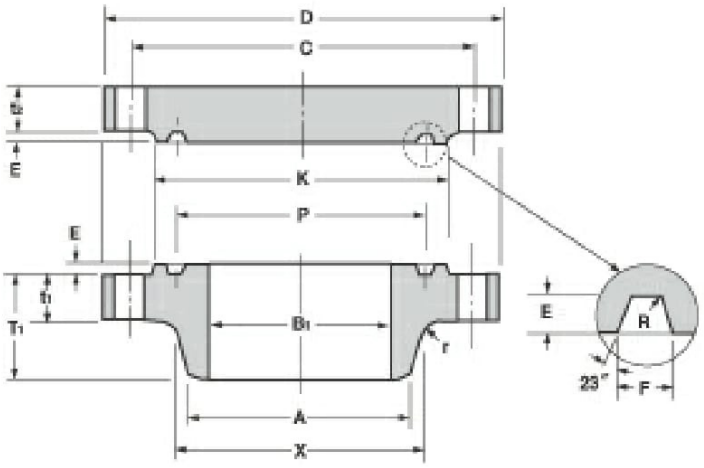

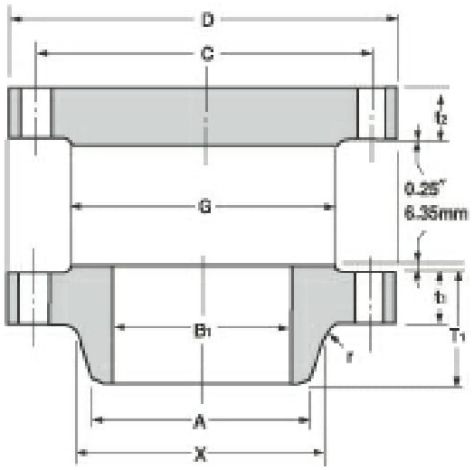

MSS

MSS SP44 FORGED FLANGES

Unit : mm

Nominal Pipe Size	Outside Diam.	O.D.of Raised Face	Diam. at Base of Hub	Thickness		Bore Wall Thickness		Length Thru Hub	Diam. of Hub at Bevel	Radius of Fillet
				Welding Neck	Blind	0.375" (9.5mm)	0.500" (12.7mm)			
	D	G	X	t_1	t_2	B_1		T_1	A	r
12	521	381.0	374.7	57.2	57.2	304.8	298.5	136.7	323.9	11.2
14	584	412.8	425.5	60.5	60.5	336.6	330.2	149.4	355.6	11.2
16	648	469.9	482.6	63.5	63.5	387.4	381.0	152.4	406.4	11.2
18	711	533.4	533.4	66.5	66.5	438.2	431.8	165.1	457.2	11.2
20	775	584.2	587.2	69.9	69.9	489.0	482.6	168.1	508.0	11.2
22	838	641.4	641.4	73.2	73.2	539.8	533.4	171.5	558.8	11.2
24	914	692.2	701.5	76.2	76.2	590.6	584.2	174.8	609.6	11.2
26	972	749.3	726.9	88.9	98.6	641.4	635.0	193.5	668.5	11.2
28	1035	800.1	782.6	95.3	104.6	692.2	685.8	206.2	719.3	12.7
30	1092	857.3	836.7	101.6	111.3	743.0	736.6	219.9	770.1	12.7
32	1149	914.4	889.0	108.0	115.8	793.8	787.4	231.6	822.5	12.7
34	1207	965.2	944.6	111.3	122.2	844.6	838.2	241.3	873.3	14.2
36	1270	1022.4	1000.3	114.3	128.5	895.4	889.0	251.0	925.6	14.2
38	1207	1035.1	1003.3	124.0	124.0	946.2	939.8	206.2	–	14.2
40	1270	1092.2	1054.1	130.0	130.0	977.0	990.6	215.9	–	14.2
42	1321	1143.0	1107.9	133.4	133.4	1047.8	1041.4	223.8	To be specified by purchaser.	14.2
44	1384	1200.2	1158.7	139.7	139.7	1098.6	1092.2	233.4		14.2
46	1441	1257.3	1212.9	146.1	146.1	1149.4	1143.0	244.3		14.2
48	1511	1308.1	1267.0	152.4	152.4	1200.2	1193.8	257.0		14.2
50	1568	1361.9	1320.8	157.2	158.8	1251.0	1244.6	268.2		14.2
52	1619	1412.7	1371.6	162.1	163.6	1301.8	1295.4	276.4		14.2
54	1702	1470.2	1425.4	169.9	171.5	1352.6	1346.2	289.1		14.2
56	1753	1527.0	1479.6	174.8	176.3	1403.4	1397.0	298.5		14.2
58	1803	1577.8	1530.4	177.8	180.8	1454.2	1447.8	306.3		14.2
60	1886	1635.3	1584.5	185.7	189.0	1505.0	1498.6	319.0		14.2

Notes:

(1) For the 'Bore' (B_1) other than wall thickness 0.375"(9.5mm) and 0.500"(12.7mm), refer to page 92.

(2) Class 400 flanges will be furnished with 0.25"(6.35mm) raised face, which is not included in 'Thickness' (t) and 'Length through Hub' (T_1).

(3) Diamensional tolerance are in accordance with ANSI B16.5.

WELDING-ENDS FOR WELDING-NECK FLANGES

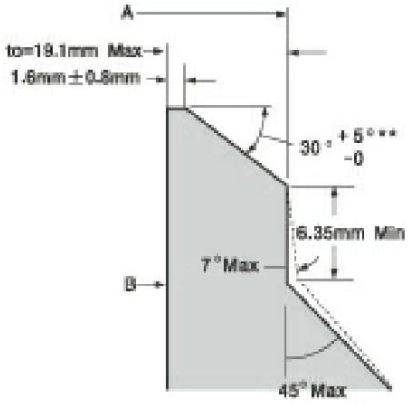

Notes:
*Or 1 inch at manufacturer's option.
**Flanges size 24" (609.6mm) and smaller may be furnished with 37-1/2° bevel at manufacturer's option

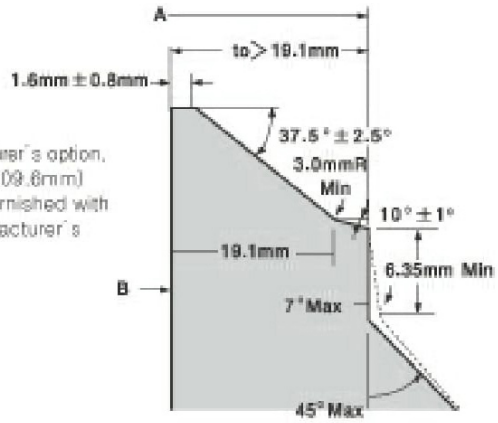

Bevel For Wall Thickness(to) 0.75"in.(20mm) or Less

Bevel For Wall Thickness(to) Greater than 0.75"in.(20mm)

Unit : mm

Nominal Pipe Size	Drilling			Pitch Diam.	Groove Dimensions			Diam. of Raised Face	Ring and Groove Number
	Bolt Circle Diam.	Number of Holes	Diam. of Holes		Width	Depth	Radius		
	C			P	F	E	R	K	
12	450.9	16	35.1	381.0	11.9	7.9	0.8	412.8	R57
14	514.4	20	35.1	419.1	11.9	7.9	0.8	457.2	R61
16	571.5	20	38.1	469.9	11.9	7.9	0.8	508.0	R65
18	628.7	24	38.1	533.4	11.9	7.9	0.8	574.5	R69
20	685.8	24	41.1	584.2	13.5	9.5	1.5	635.0	R73
22	743.0	24	44.5	635.0	15.1	11.1	1.5	685.8	R81
24	812.8	24	47.8	692.2	16.7	11.1	1.5	749.3	R77
26	876.3	28	47.8	749.3	19.8	12.7	1.5	809.8	R93
28	939.8	28	50.8	800.1	19.8	12.7	1.5	860.6	R94
30	997.0	28	53.8	857.3	19.8	12.7	1.5	917.4	R95
32	1054.1	28	53.8	914.4	23.0	14.3	1.5	984.3	R96
34	1104.9	28	53.8	965.2	23.0	14.3	1.5	1035.1	R97
36	1168.4	32	53.8	1022.4	23.0	14.3	1.5	1092.2	R98
38	1117.6	32	47.8						
40	1174.8	32	50.8						
42	1225.6	32	50.8						
44	1282.7	32	53.8						
46	1339.9	36	53.8						
48	1403.4	28	60.5						
50	1460.5	32	60.5						
52	1511.3	32	60.5						
54	1581.2	28	66.5						
56	1632.0	32	66.5						
58	1682.8	32	66.5						
60	1752.6	32	73.2						

(4) Maximum Pressure Rating for raised face flanges is 985 psi(68 BARS) at atmospheric temperature.
(5) Flange dimension of size 12" through 24" flanges(except 22" are in accordance with ANSI B16.5.
(6) For sizes 26" and larger 'Diameter of Hub at Bevel (A)' are in accordance with ASME Boiler and pressure vessel code.

CLASS 600 FLANGES

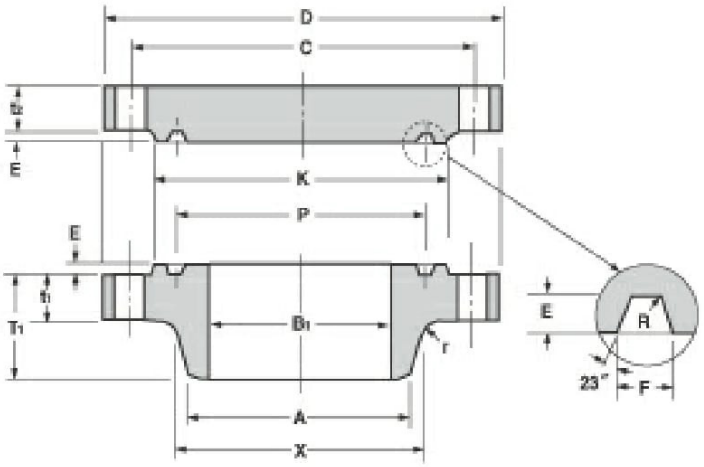

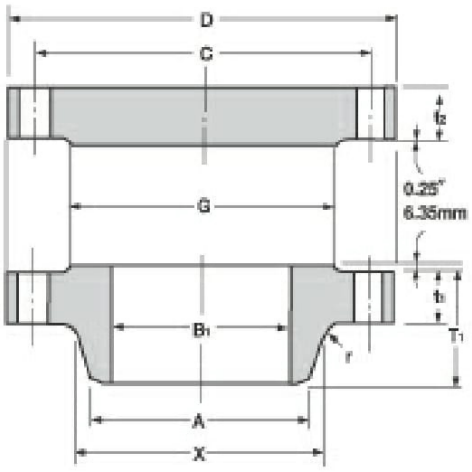

MSS

MSS SP44 FORGED FLANGES

Unit : mm

Nominal Pipe Size	Outside Diam.	O.D.of Raised Face	Diam. at Base of Hub	Thickness		Bore Wall Thickness		Length Thru Hub	Diam. of Hub at Bevel	Radius of Fillet
				Welding Neck	Blind	0.375" (9.5mm)	0.500" (12.7mm)			
	D	G	X	t1	t2	B1		T1	A	r
12	559	381.0	400.1	66.5	66.5	304.8	298.5	155.4	323.9	11.2
14	603	412.8	431.8	69.9	69.9	336.6	330.2	165.1	355.6	11.2
16	686	469.9	495.3	76.2	76.2	387.4	381.0	177.8	406.4	11.2
18	743	533.4	546.1	82.6	82.6	438.2	431.8	184.2	457.2	11.2
20	813	584.2	609.6	88.9	88.9	489.0	482.6	190.5	508.0	11.2
22	870	641.4	666.8	95.3	95.3	539.8	533.4	196.9	558.8	11.2
24	940	692.2	717.6	101.6	101.6	590.6	584.2	203.2	609.6	11.2
26	1016	749.3	747.8	108.0	125.5	641.4	635.0	222.3	671.6	12.7
28	1073	800.1	803.1	111.3	131.8	692.2	685.8	235.0	723.9	12.7
30	1130	857.3	862.1	114.3	139.7	743.0	736.6	247.7	774.7	12.7
32	1194	914.4	917.4	117.3	147.6	793.8	787.4	260.4	825.5	12.7
34	1245	965.2	973.1	120.7	153.9	844.6	838.2	269.7	877.8	14.2
36	1314	1022.4	1031.7	124.0	162.1	895.4	889.0	282.4	928.6	14.2
38	1270	1054.1	1022.4	152.4	155.4	946.2	939.8	254.0	–	14.2
40	1321	1111.3	1073.2	158.8	162.1	997.0	990.6	263.7	–	14.2
42	1403	1168.4	1127.3	168.1	171.5	1047.8	1041.4	279.4	To be specified by purchaser.	14.2
44	1454	1225.4	1181.1	173.0	177.8	1198.6	1092.2	289.1		14.2
46	1511	1276.4	1234.9	179.3	185.7	1149.4	1143.0	300.0		14.2
48	1594	1333.5	1289.1	189.0	195.3	1200.2	1193.8	316.0		14.2
50	1670	1384.3	1343.2	196.9	203.2	1251.0	1244.6	328.7		14.2
52	1721	1435.1	1394.0	203.2	209.6	1301.8	1295.4	336.6		14.2
54	1778	1492.3	1447.8	209.6	217.4	1352.6	1346.2	349.3		14.2
56	1854	1543.1	1501.6	217.4	225.6	1403.4	1397.0	362.0		15.7
58	1905	1600.2	1552.4	222.3	231.6	1454.2	1447.8	369.8		15.7
60	1994	1657.4	1609.9	233.4	242.8	1505.0	1498.6	388.9		17.5

Notes:

(1) For the 'Bore' (B_1) other than wall thickness 0.375"(9.5mm) and 0.500"(12.7mm), refer to page 92.

(2) Class 600 flanges will be furnished with 0.25"(6.35mm) raised face, which is not included in 'Thickness' (t) and 'Length through Hub' (T_1).

(3) Dimensional tolerance are in accordance with ANSI B16.5.

WELDING-ENDS FOR WELDING-NECK FLANGES

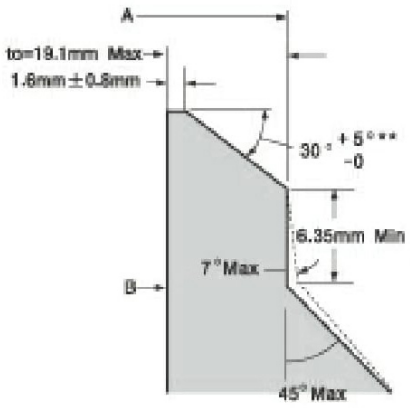

Notes:
*Or 1 inch at manufacturer's option.
**Flanges size 24" (609.6mm) and smaller may be furnished with 37-1/2° bevel at manufacturer's option

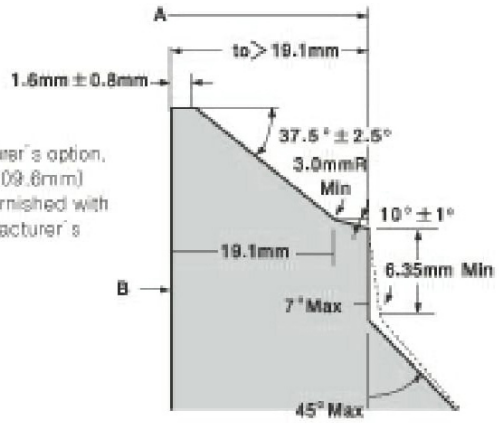

Bevel For Wall Thickness(to) 0.75"in.(20mm) or Less

Bevel For Wall Thickness(to) Greater than 0.75"in.(20mm)

Unit : mm

Nominal Pipe Size	Drilling			Pitch Diam.	Groove Dimensions			Diam. of Raised Face	Ring and Groove Number
	Bolt Circle Diam.	Number of Holes	Diam. of Holes		Width	Depth	Radius		
	C			P	F	E	R	K	
12	489.0	20	35.1	381.0	11.9	7.9	0.8	412.8	R57
14	527.1	20	38.1	419.1	11.9	7.9	0.8	457.2	R61
16	603.3	20	41.1	469.9	11.9	7.9	0.8	508.0	R65
18	654.1	20	44.5	533.4	11.9	7.9	0.8	574.5	R69
20	723.9	24	44.5	584.2	13.5	9.5	1.5	635.0	R73
22	777.7	24	47.8	635.0	15.1	11.1	1.5	685.8	R81
24	838.2	24	50.8	692.2	16.7	11.1	1.5	749.3	R77
26	914.4	28	50.8	749.3	19.8	12.7	1.5	809.8	R93
28	965.2	28	53.8	800.1	19.8	12.7	1.5	860.6	R94
30	1022.4	28	53.8	857.3	19.8	12.7	1.5	917.4	R95
32	1079.5	28	60.5	914.4	23.0	14.3	1.5	984.3	R96
34	1130.3	28	60.5	965.2	23.0	14.3	1.5	1035.1	R97
36	1193.8	28	66.5	1022.4	23.0	14.3	1.5	1092.2	R98
38	1162.1	28	60.5						
40	1212.9	32	60.5						
42	1282.7	28	66.5						
44	1333.5	32	66.5						
46	1390.7	32	66.5						
48	1460.5	32	73.2						
50	1524.0	28	79.2						
52	1574.8	32	79.2						
54	1632.0	32	79.2						
56	1695.5	32	85.9						
58	1746.3	32	85.9						
60	1822.5	28	91.9						

(4) Maximum Pressure Rating for raised face flanges is 1480 psi(102.1 BARS) at atmospheric temperature.
(5) Flange dimension of size 12" through 24" flanges(except 22" are in accordance with ANSI B16.5.
(6) For sizes 26" and larger 'Diameter of Hub at Bevel (A)' are in accordance with ASME Boiler and pressure vessel code.

CLASS 900 FLANGES

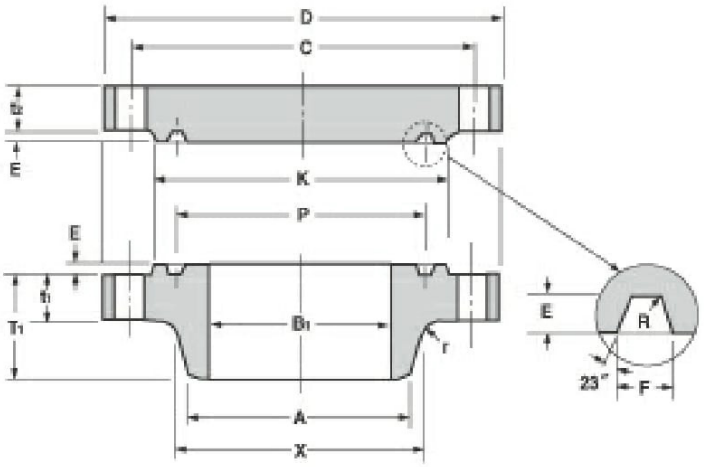

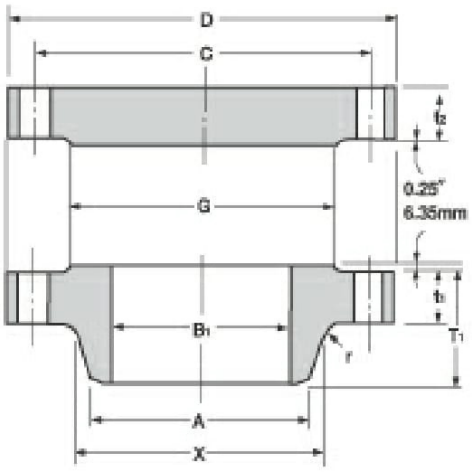

MSS

MSS SP44 FORGED FLANGES

Unit : mm

Nominal Pipe Size	Outside Diam.	O.D.of Raised Face	Diam. at Base of Hub	Thickness		Bore		Length Thru Hub	Diam. of Hub at Bevel	Radius of Fillet
						Wall Thickness				
				Welding Neck	Blind	0.375" (9.5mm)	0.500" (12.7mm)			
	D	G	X	t1	t2	B1		T1	A	r
12	610	381.0	419.1	79.2	79.2	304.8	298.5	200.2	323.9	11.2
14	641	412.8	450.9	85.9	85.9	336.6	330.2	212.9	355.6	11.2
16	705	469.9	508.0	88.9	88.9	387.4	381.0	215.9	406.4	11.2
18	787	533.4	565.2	101.6	101.6	438.2	431.8	228.6	457.2	11.2
20	857	584.2	622.3	108.0	108.0	489.0	482.6	247.7	508.0	11.2
24	1041	692.2	749.3	139.7	139.7	590.6	584.2	292.1	609.6	11.2
26	1086	749.3	774.7	139.7	160.3	641.4	635.0	285.8	676.4	11.2
28	1168	800.1	831.9	142.7	171.5	692.2	685.8	298.5	728.7	12.7
30	1232	857.3	889.0	149.4	182.4	743.0	736.6	311.2	781.1	12.7
32	1314	914.4	946.2	158.8	193.5	793.8	787.4	330.2	831.9	12.7
34	1397	965.2	1006.3	165.1	204.7	844.6	838.2	349.3	884.2	14.2
36	1461	1022.4	1063.8	171.5	214.4	895.4	889.0	362.0	936.8	14.2
38	1461	1098.6	1073.2	190.5	215.9	946.2	939.8	352.6	To be specified by purchaser.	19.1
40	1511	1162.1	1127.3	196.9	223.8	997.0	990.6	363.5		20.6
42	1562	1212.9	1176.3	206.2	231.6	1047.8	1041.4	371.3		20.6
44	1648	1270.0	1234.9	214.4	242.8	1098.6	1092.2	390.7		22.4
46	1734	1333.5	1292.4	225.6	255.5	1149.4	1143.0	411.0		22.4
48	1784	1384.3	1343.2	233.4	263.7	1200.2	1193.8	419.1		23.9

Notes:

(1) For the 'Bore' (B_1) other than wall thickness 0.375"(9.5mm) and 0.500"(12.7mm), refer to page 92.

(2) Class 900 flanges will be furnished with 0.25"(6.35mm) raised face, which is not included in 'Thickness' (t) and 'Length through Hub' (T_1).

(3) Diamensional tolerance are in accordance with ANSI B16.5.

WELDING-ENDS FOR WELDING-NECK FLANGES

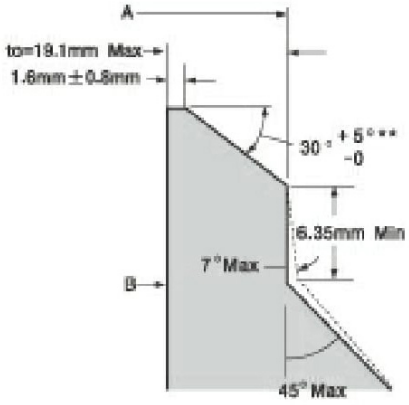

Notes:
*Or 1 inch at manufacturer's option.
**Flanges size 24" (609.6mm) and smaller may be furnished with 37-1/2° bevel at manufacturer's option

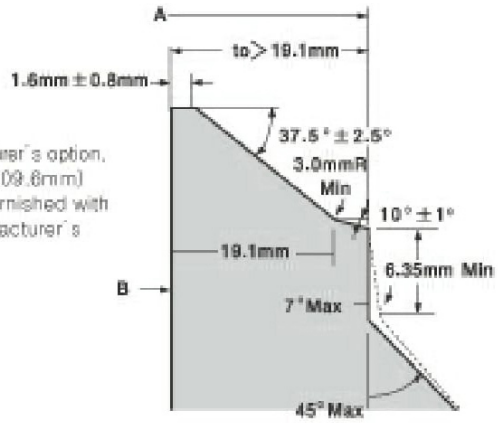

Bevel For Wall Thickness(to) 0.75"in.(20mm) or Less

Bevel For Wall Thickness(to) Greater than 0.75"in.(20mm)

Unit : mm

Nominal Pipe Size	Drilling			Pitch Diam.	Groove Dimensions			Diam. of Raised Face	Ring and Groove Number
	Bolt Circle Diam.	Number of Holes	Diam. of Holes		Width	Depth	Radius		
	C			P	F	E	R	K	
12	533.4	20	38.1	381.0	11.9	7.9	0.8	419.1	R57
14	558.8	20	41.1	419.1	16.7	11.1	1.5	466.9	R62
16	616.0	20	44.5	469.9	16.7	11.1	1.5	523.7	R66
18	685.8	20	50.8	533.4	19.8	12.7	1.5	593.9	R70
20	749.3	20	53.8	584.2	19.8	12.7	1.5	647.7	R74
24	901.7	20	66.5	692.2	27.0	15.9	2.3	771.7	R78
26	952.5	20	73.2	749.3	30.2	17.5	2.3	831.9	R100
28	1022.4	20	79.2	800.1	33.3	17.5	2.3	889.0	R101
30	1085.9	20	79.2	857.3	33.3	17.5	2.3	946.2	R102
32	1155.7	20	85.9	914.4	33.3	17.5	2.3	1003.3	R103
34	1225.6	20	91.9	965.2	36.5	20.6	2.3	1066.8	R104
36	1289.1	20	91.9	1022.4	36.5	20.6	2.3	1124.0	R105
38	1289.1	20	91.9						
40	1339.9	24	91.9						
42	1390.7	24	91.9						
44	1463.5	24	98.6						
46	1536.7	24	104.6						
48	1587.5	24	104.6						

(4) Maximum Pressure Rating for raised face flanges is 2220 psi(153.1 BARS) at atmospheric temperature.
(5) Flange dimension of size 12" through 24" flanges are in accordance with ANSI B16.5.
(6) For sizes 26" and larger 'Diameter of Hub at Bevel (A)' are in accordance with ASME Boiler and pressure vessel code.

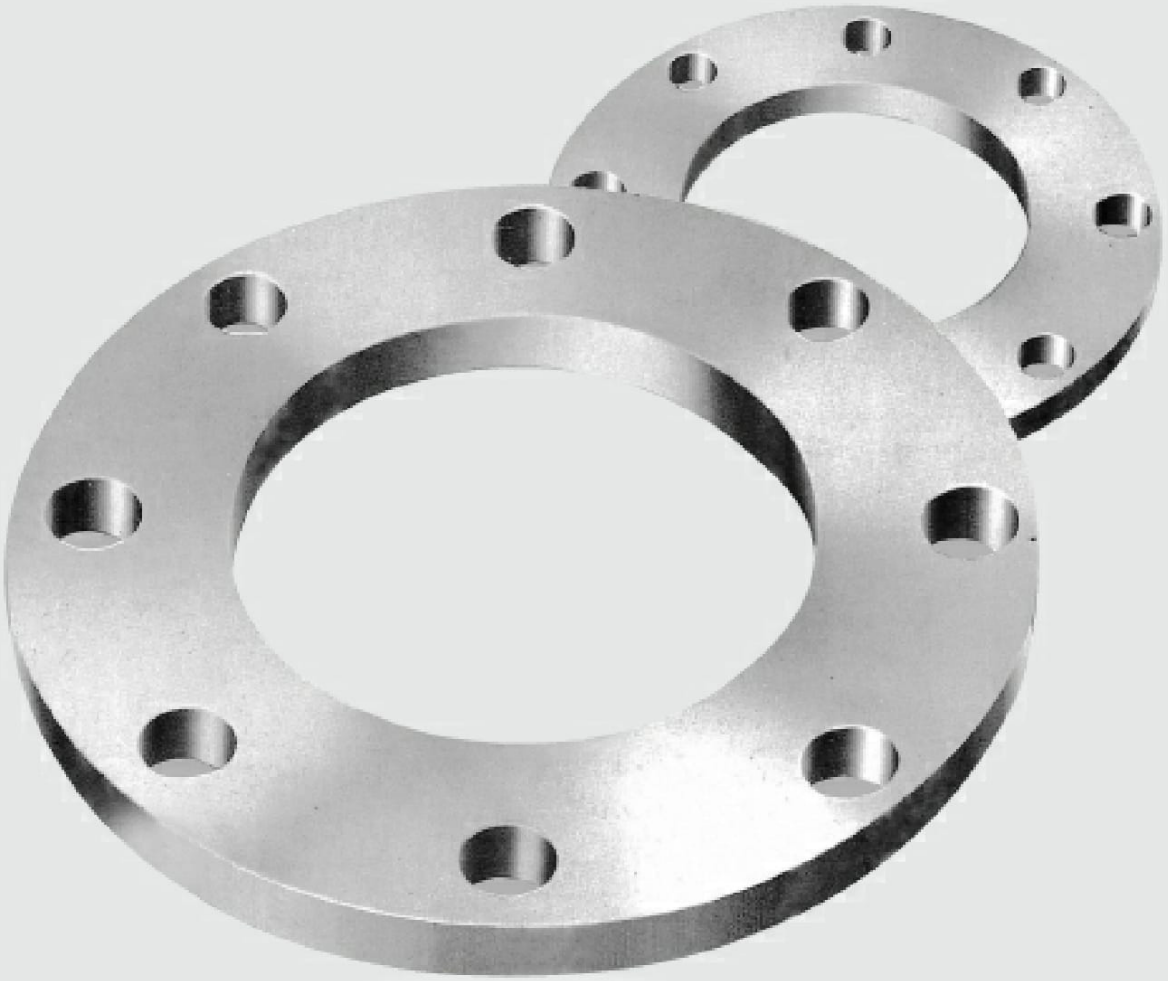

AWWA FLANGES

- General Specifications
- Class B & D Flanges Table 2
- Class D Flanges Table 3
- Class E Flanges Table 4

GENERAL SPECIFICATIONS

AWWA C207 FLANGES

1. Standard Finishes for Contact Face of AWWA Flange

Flanges of all classes shall be flat faced–that is, without projection or raised face. The dimensions given for thickness are minimum. The flanges shall be faced smooth or may have a serrated finish of approximately 32 serrations per inch, approximately 1/64 in. deep. Serrations may be either spiral or concentric.

2. Dimensional Tolerances for AWWA Flanges

Dimension		Tolerance (inch)
Bore		+1/16(1.6mm) – 0
Outside diameter		±1/8(3.2mm)
Thickness	18 in and smaller	+1/8(3.2mm) – 0
	20 in and larger	+3/16(4.8mm) – 0
Length through Hub		+3/16(4.8mm) – 1/16(1.6mm)
Bolt Circle Diameter		±1/16(1.6mm)

Notes: For other dimensional tolerances, see ANSI B16.5 (page 48)

3. Bolting

Bolt and nuts shall be carbon steel ASTM A307 Grades A or B. Bolts shall have regular unfinished square or hexagonal heads, and nuts shall have regular square or hexagonal dimensions all in accordance with ANSI B18.21 for wrench head bolts and nuts and wrench openings.
All bolts and nuts shall be threaded in accordance with ANSI B1.1 for screw theads, coarse–thread series, Class 2A and 2B fit.

Bolt Circle Diameter

4. Gaskets

These standards are predicated on the user of either a cloth–inserted rubber gasket 1/16 in. thickness or an asbestos ring gasket that is either 1/16 in. or 1/8 in. thickness at the purchaser's option. The gasket shall extend from the inside diameter of the flange to at least the inside edge of the bolt holes, or it may.

CLASS B & D FLANGES
TABLE2

AWWA Standard Steel Ring Flanges, Class B (86 psi)and Class D (175–150 psi)

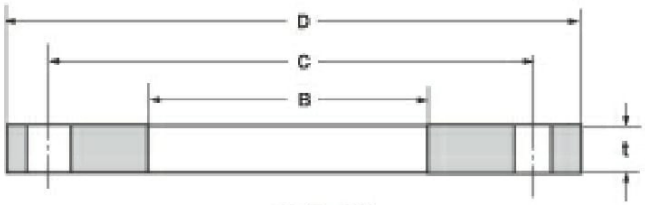

SLIP-ON

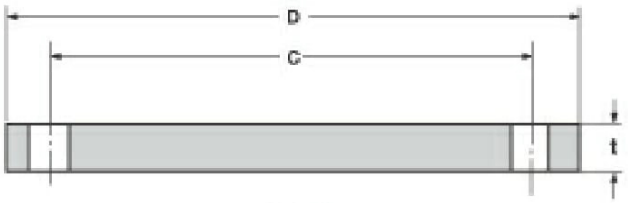

BLIND

AWWA C207

Unit : mm

Nominal Pipe Size	Outside Diam.	Bore	Thickness		Drilling			
					Bolt Circle Diam.	Number of Holes	Diam.of Bolt Holes	
	D	B	Class B(t)	Class D(t)	C		Class B	Class D
4	228.6	116.1	15.9	15.9	190.5	8	19.1	19.1
5	254.0	143.8	15.9	15.9	215.9	8	22.2	22.2
6	279.4	170.7	17.5	17.5	241.3	8	22.2	22.2
8	342.9	221.5	17.5	17.5	298.5	8	22.2	22.2
10	406.4	276.4	17.5	17.5	362.0	12	25.4	25.4
12	482.6	327.2	17.5	20.6	431.8	12	25.4	25.4
14	533.4	360.4	17.5	23.8	476.3	12	28.6	28.6
16	596.9	411.2	17.5	25.4	539.8	16	28.6	28.6
18	635.0	461.8	17.5	27.0	577.9	16	31.8	31.8
20	698.5	512.8	17.5	28.6	635.0	20	31.8	31.8
22	749.3	563.6	19.1	30.2	692.2	20	34.9	34.9
24	812.8	614.4	19.1	31.8	749.3	20	34.9	34.9
26	870.0	665.2	20.6	33.3	806.5	24	34.9	34.9
28	927.1	716.0	22.2	33.3	863.6	28	34.9	34.9
30	984.2	766.8	22.2	34.9	914.4	28	34.9	34.9
32	1060.5	817.6	23.8	38.1	977.6	28	41.3	41.3
34	1111.3	868.4	23.8	38.1	1028.7	32	41.3	41.3
36	1168.4	919.2	25.4	41.3	1085.9	32	41.3	41.3
38	1238.3	970.0	25.4	41.3	1149.4	32	41.3	41.3
40	1289.1	1020.8	25.4	41.3	1200.2	36	41.3	41.3
42	1346.2	1071.6	28.6	44.5	1257.3	36	41.3	41.3
44	1403.4	1122.4	28.6	44.5	1314.5	40	41.3	41.3
46	1454.2	1173.2	28.6	44.5	1365.3	40	41.3	41.3
48	1511.3	1224.0	31.8	47.6	1422.4	44	41.3	41.3
50	1568.5	1274.8	31.8	50.8	1479.6	44	47.6	47.6
52	1625.6	1325.6	31.8	50.8	1536.7	44	47.6	47.6
54	1682.8	1376.4	34.9	54.0	1593.9	44	47.6	47.6
60	1854.2	1528.8	38.1	57.2	1759.0	52	47.6	47.6
66	2032.0	1681.2	41.3	63.5	1930.4	52	47.6	47.6
72	2197.1	1833.6	44.5	66.7	2095.5	60	47.6	47.6
78	2362.2	1986.0	50.8	69.9	2260.6	64	54.0	54.0
84	2533.7	2138.4	50.8	69.9	2425.7	64	54.0	54.0
90	2705.1	2290.8	57.2	76.2	2590.8	68	60.3	60.3
96	2876.6	2443.2	57.2	76.2	2755.9	68	60.3	60.3
102	3048.0	2595.6	63.5	82.6	2908.3	72	66.7	66.7
108	3219.5	2748.0	63.5	82.6	3067.1	72	66.7	66.7
114	3390.9	2900.4	69.9	88.9	3219.5	76	73.0	73.0
120	3562.4	3052.8	69.9	88.9	3371.9	76	73.0	73.0

Notes:

(1) The 'Bore (B)' shall be 3/16 in. larger than the nominal outside diameter of the pipe, unless otherwise specified.

AWWA

CLASS D FLANGES
TABLE3

AWWA Standard Steel Ring Hub Flanges, Class B (86 psi)and Class D (175-150 psi)

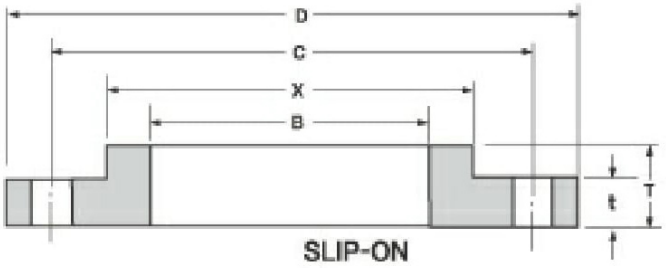

AWWA C207

Unit : mm

Nominal Pipe Size	Outside Diam.	Bore	Thickness	Length Through Hub	Diam. of Hub at Base	Drilling			
						Bolt Circle Diam.	Number of Holes	Diam.of Bolt Holes	
	D	B	t	T	X	C		Class B	Class D
4	228.6	116.1	12.7	22.2	134.9	□90.5	8	19.1	19.1
5	254.0	143.8	14.3	31.8	160.3	215.9	8	19.1	22.2
6	279.4	170.7	14.3	31.8	192.1	241.3	8	19.1	22.2
8	342.9	221.5	14.3	31.8	246.1	298.5	8	19.1	22.2
10	406.4	276.4	17.5	31.8	304.8	362.0	12	19.1	25.4
12	482.6	327.2	17.5	31.8	365.1	431.8	12	19.1	25.4
14	533.4	360.4	19.1	31.8	400.1	476.3	12	22.2	28.6
16	596.9	411.2	19.1	31.8	457.2	539.8	16	22.2	28.6
18	635.0	461.8	19.1	31.8	504.8	577.9	16	22.2	31.8
20	698.5	512.8	19.1	31.8	558.8	635.0	20	22.2	31.8
22	749.3	563.6	25.4	44.5	616.0	692.2	20	22.2	34.9
24	812.8	614.4	25.4	44.5	663.6	749.3	20	22.2	34.9
26	870.0	665.2	25.4	44.5	723.9	806.5	24	22.2	34.9
28	927.1	716.0	25.4	44.5	774.7	863.6	28	22.2	34.9
30	984.2	766.8	25.4	44.5	825.5	914.4	28	25.4	34.9
32	1060.5	817.6	28.6	44.5	882.7	977.6	28	25.4	41.3
34	1111.3	868.4	28.6	44.5	933.5	1028.7	32	25.4	41.3
36	1168.4	919.2	28.6	44.5	984.3	1085.9	32	25.4	41.3
38	1238.3	970.0	28.6	44.5	1035.1	1149.4	32	25.4	41.3
40	1289.1	1020.8	28.6	44.5	1092.2	1200.2	36	25.4	41.3
42	1346.2	1071.6	31.8	44.5	1143.0	1257.3	36	28.6	41.3
44	1403.4	1122.4	31.8	57.2	1193.8	1314.5	40	28.6	41.3
46	1454.2	1173.2	31.8	57.2	1244.6	1365.3	40	28.6	41.3
48	1511.3	1224.0	34.9	63.5	1295.4	1422.4	44	28.6	41.3
50	1568.5	1274.8	34.9	63.5	1346.2	1479.6	44	31.8	47.6
52	1625.6	1325.6	34.9	63.5	1397.0	1536.7	44	31.8	47.6
54	1682.8	1376.4	34.9	63.5	1447.8	1593.9	44	34.9	47.6
60	1854.2	1528.8	38.1	69.9	1600.2	1759.0	52	34.9	47.6
66	2032.0	1681.2	38.1	69.9	1752.6	1930.4	52	34.9	47.6
72	2197.1	1833.6	38.1	69.9	1905.0	2095.5	60	34.9	47.6
78	2362.2	1986.0	44.5	76.2	2063.8	2260.6	64	41.3	54.0
84	2533.7	2138.4	44.5	76.2	2222.5	2425.7	64	41.3	54.0
90	2705.1	2290.8	50.8	82.6	2381.3	2590.8	68	47.6	60.3
96	2876.6	2443.2	50.8	82.6	2540.0	2755.9	68	47.6	60.3
102	3048.0	2595.6	57.2	88.9	2686.1	2908.3	72	54.0	66.7
108	3219.5	2748.0	57.2	88.9	2832.1	3067.1	72	54.0	66.7
114	3390.9	2900.4	63.5	95.3	2990.9	3219.5	76	60.3	73.0
120	3562.4	3052.8	63.5	95.3	3149.6	3371.9	76	60.3	73.0

Notes:

(1) For standard finishes for contact face, refer to page 47.

(2) For Slip-on Flanges,(Hub type Flanges), the hubs can be shaped either vertical from base to top or tapered within the limits of 7 degrees.

(3) The "Bore" shall be 3/16 in. larger than the nominal outside diameter of the pipe, unless otherwise specified.

AWWA

CLASS E FLANGES
TABLE4

AWWA Standard Steel Hub Flanges, Class E (275 psi)

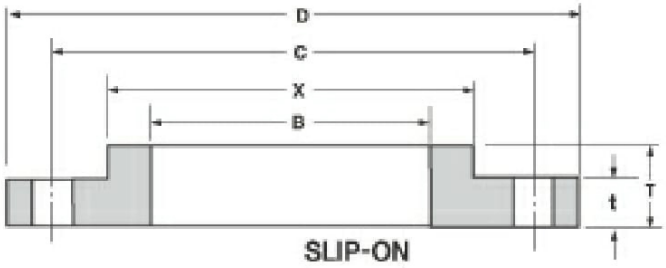

AWWA C207

Unit : mm

Nominal Pipe Size	Outside Diam.	Bore	Thickness	Length Through Hub	Diam. of Hub at Base	Drilling		
						Bolt Circle Diam.	Number of Holes	Diam.of Bolt Holes
	D	B	t	T	X	C		
4	228.6	116.1	23.8	33.3	134.9	190.5	8	19.1
5	254.0	143.8	23.8	36.5	160.3	215.9	8	22.2
6	279.4	170.7	25.4	39.7	192.1	241.3	8	22.2
8	342.9	221.5	28.6	44.5	248.1	298.5	8	22.2
10	406.4	276.4	30.2	49.2	304.8	362.0	12	25.4
12	482.6	327.2	31.8	55.6	365.1	431.8	12	25.4
14	533.4	360.4	34.9	57.2	400.1	476.3	12	28.6
16	596.9	411.2	36.5	63.5	457.2	539.8	16	28.6
18	635.0	461.8	39.7	68.3	504.8	577.9	16	31.8
20	698.5	512.8	42.9	73.0	558.8	635.0	20	31.8
22	749.3	563.6	46.0	79.4	616.0	692.2	20	34.9
24	812.8	614.4	47.6	82.6	663.6	749.3	20	34.9
26	870.0	665.2	50.8	85.7	723.9	806.5	24	34.9
28	927.1	716.0	52.4	87.3	781.1	863.6	28	34.9
30	984.2	766.8	54.0	88.9	831.9	914.4	28	34.9
32	1060.5	817.6	57.2	92.1	889.0	977.9	28	41.3
34	1111.3	868.4	58.7	93.7	939.8	1028.7	32	41.3
36	1168.4	919.2	60.3	95.3	997.0	1085.9	32	41.3
38	1238.3	970.0	60.3	95.3	1060.5	1149.4	32	41.3
40	1289.1	1020.8	63.5	98.4	1111.3	1200.2	36	41.3
42	1346.2	1071.6	66.7	101.6	1168.4	1257.3	36	41.3
44	1403.4	1122.4	66.7	101.6	1219.2	1314.5	40	41.3
46	1454.2	1173.2	68.3	103.2	1270.0	1365.3	40	41.3
48	1511.3	1224.0	69.9	104.8	1327.2	1422.4	44	41.3
50	1568.5	1274.8	69.9	104.8	1378.0	1479.6	44	47.6
52	1625.6	1325.6	73.0	108.0	1435.1	1536.7	44	47.6
54	1682.8	1376.4	76.2	111.1	1492.3	1593.9	44	47.6
60	1854.2	1528.8	79.4	114.3	1657.4	1759.0	52	47.6
66	2032.0	1681.2	85.7	123.8	1816.1	1930.4	52	47.6
72	2197.1	1833.6	88.9	127.0	1993.9	2095.5	60	47.6
78	2362.2	1986.0	98.4	136.5	2146.3	2260.6	64	54.0
84	2533.7	2138.4	98.4	136.5	2298.7	2425.7	64	54.0
90	2705.1	2290.8	108.0	146.1	2457.5	2590.8	68	60.3
96	2876.6	2443.2	108.0	146.1	2609.9	2755.9	68	60.3
102	3048.0	2595.6	117.5	155.6	2762.3	2908.3	72	66.7
108	3219.5	2748.0	117.5	155.6	2908.3	3067.1	72	66.7
114	3390.9	2900.4	127.0	165.1	3079.8	3219.5	76	73.0
120	3562.4	3052.8	127.0	165.1	3251.2	3371.9	76	73.0

Notes:

(1) The 'Bore (B)' shall be 3/16 in. larger than the nominal outside diameter of the pipe, unless otherwise specified.

AWWA

DIN FLANGES

- 6-BAR(DIN 2573, 2527, 2631)
- 10-BAR(DIN 2576, 2527, 2632)
- 16-BAR(DIN 2543, 2527, 2633)
- 25-BAR(DIN 2544, 2527, 2634)
- 40-BAR(DIN 2545, 2527, 2635)

6BAR

DIN 2573 SLIP – ON FLANGES
DIN 2527 BLIND FLANGES
DIN 2631 WELDING NECK FLANGES

WELDING NECK

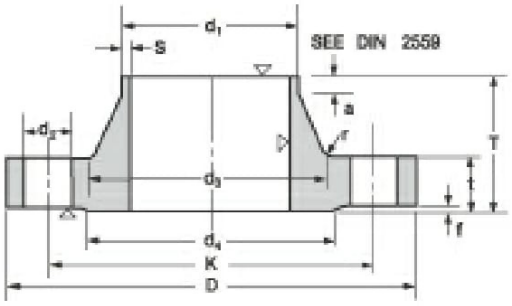

SLIP-ON

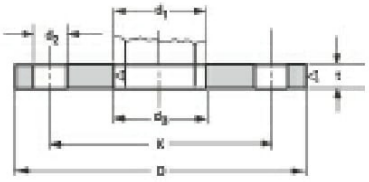

BLIND

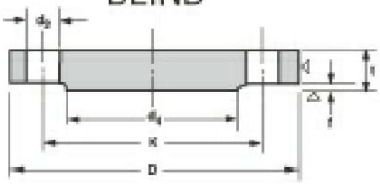

Unit : mm

Nominal Bore	Bore d1	Common Dimension D	t Welding Neck	t Slip-on	t Blind	K	T	Hub d3	S	r	a ≈	Raised Face d4	f	Drilling Number of Bolt	Dia.of Bolt		d2	Approx.Weight(kg) DIN 2573	DIN 2631
10	14 17.2*)	75	12	12	12	50	28	22 26	1.8	4	6	35	2	4	M10	–	11.5	0.036	0.325
15	20 21.3*)	80	12	12	12	55	30	26 30	2.0	4	6	40	2	4	M10	–	11.5	0.410	0.392
20	25 26.9*)	90	14	14	14	65	32	35 38	2.3	4	6	50	2	4	M10	–	11.5	0.600	0.592
25	30 33.7*)	100	14	14	14	75	35	40 42	2.6	4	6	60	2	4	M10	–	11.5	0.740	0.747
32	38 42.4*)	120	14	16	14	90	35	50 55	2.6	6	6	70	2	4	M12	(1/2")	14	1.19	1.05
40	44.5 48.3*)	130	14	16	14	100	38	58 62	2.6	6	7	80	3	4	M12	(1/2")	14	1.39	1.18
50	57 60.3*)	140	14	16	14	110	38	70 74	2.9	6	8	90	3	4	M12	(1/2")	14	1.53	1.34
65	76.1*)	160	14	16	14	130	38	88	2.9	6	9	110	3	4	M12	(1/2")	14	1.89	1.67
80	88.9*)	190	16	18	16	150	42	102	3.2	8	10	128	3	4	M16	(5/8")	18	2.98	2.71
100	108 114.3*)	210	16	18	16	170	45	122 130	3.6	8	10	148	3	4	M16	(5/8")	18	3.46	3.24
125	133 139.7*)	240	18	20	18	200	48	148 155	4.0	8	10	178	3	8	M16	(5/8")	18	4.60	4.49
150	159 168.3*)	265	18	20	18	225	48	172 184	4.5	10	12	202	3	8	M16	(5/8")	18	5.22	5.15
200	216 219.1*)	320	20	22	20	280	55	230 236	5.9	10	15	258	3	8	M16	(5/8")	18	7.15	7.78
250	267 273*)	375	22	24	22	335	60	282 290	6.2	12	15	312	3	12	M16	(5/8")	18	9.61	10.8
300	318	440	22	24	22	395	62	335 342	7.1	12	15	365	4	12	M20	(3/4")	23	12.6	14.0
350	355.6*) 368	490	22	26	22	445	62	385	7.1	12	15	415	4	12	M20	(3/4")	23	15.6	16.1
400	406.4*) 419	540	22	28	22	495	65	438	7.1	12	15	455	4	16	M20	(3/4")	23	18.4	18.3
500	508*) 521	645	24	30	24	600	68	538	7.1	12	15	570	4	20	M20	(3/4")	23	24.5	24.6
600	609.6*) 622	755	24			705	70	640	7.1	12	16	670	5	20	M24	(7/8")	27		
700	711.2*) 720	860	24			810	70	740	7.1	12	16	775	5	24	M24	(7/8")	27		
800	812.8*) 820	975	24			920	70	842	7.1	12	16	880	5	24	M27	(1")	30		
900	914.4*) 920	1075	26			1020	70	942	7.1	12	16	980	5	24	M27	(1")	30		
1000	1016*) 1020	1175	26			1120	70	1045	7.1	16	16	1080	5	28	M27	(1")	30		

Notes : Outside diameter of pipe complies with ISO recommendation R64

DIN

10BAR

DIN 2576 SLIP – ON FLANGES
DIN 2527 BLIND FLANGES
DIN 2632 WELDING NECK FLANGES

WELDING NECK

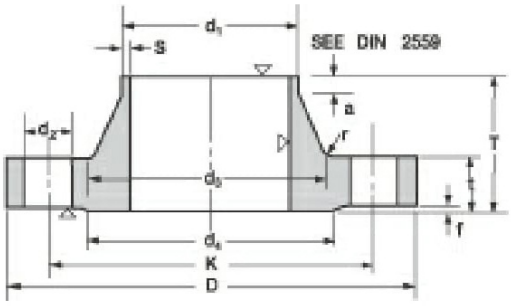

SLIP-ON

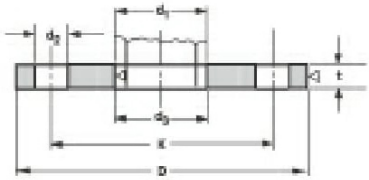

BLIND

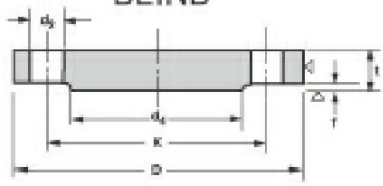

Unit : mm

Nominal Bore	Bore d1	Common Dimension D	t Welding Neck	t Slip-on	t Blind	k	T	Hub d3	S	r	a ≥	Raised Face d4	f	Drilling Number of Bolt	Dia. of Bolt		d5	Accoc. Weight (kg) DIN 2576	DIN 2632
10	14 17.2*)	90	14	14	14	60	35	25 28	1.8	4	6	40	2	4	M12	(1/2")	14	0.163	0.580
15	20 21.3*)	95	14	14	14	65	35	30 32	2.0	4	6	45	2	4	M12	(1/2")	14	0.675	0.648
20	25 26.9*)	105	16	16	16	75	38	38 40	2.3	4	6	58	2	4	M12	(1/2")	14	0.947	0.952
25	30 33.7*)	115	16	16	16	85	38	42 45	2.6	4	6	68	2	4	M12	(1/2")	14	1.14	1.14
32	38 42.4*)	140	16	16	16	100	40	52 56	2.6	6	6	78	2	4	M16	(5/8")	18	1.66	1.69
40	44.5 48.3*)	150	16	16	16	110	42	60 64	2.6	6	7	88	3	4	M16	(5/8")	18	1.89	1.86
50	57 60.3*)	165	18	18	18	125	45	72 75	2.9	6	8	102	3	4	M16	(5/8")	18	2.51	2.53
65	76.1*)	185	18	18	18	145	45	90	2.9	6	10	122	3	4	M16	(5/8")	18	3.00	3.06
80	88.9*)	200	20	20	20	160	50	105	3.2	8	10	138	3	8	M16	(5/8")	18	3.79	3.70
100	108 114.3*)	220	20	20	20	180	52	125 131	3.6	8	12	158	3	8	M16	(5/8")	18	4.20	4.62
125	133 139.7*)	250	22	22	22	210	55	150 156	4.0	8	12	188	3	8	M16	(5/8")	18	5.71	6.30
150	159 168.3*)	285	22	22	22	240	55	175 184	4.5	10	12	212	3	8	M20	(3/4")	23	6.72	7.75
200	216 219.1*)	340	24	24	24	295	62	232 235	5.9	10	16	268	3	8	M20	(3/4")	23	9.50	11.3
250	267 273*)	395	26	26	26	350	68	285 292	6.3	12	16	320	3	12	M20	(3/4")	23	12.5	14.7
300	318	445	26	26	28	400	68	335 344	7.1	12	16	370	4	12	M20	(3/4")	23	14.4	17.6
350	355.6*) 368	505	26	28	30	460	68	385	7.1	12	16	430	4	16	M20	(3/4")	23	20.6	21.4
400	406.4*) 419	565	28	32	32	515	72	440	7.1	12	16	482	4	16	M24	(7/8")	27	27.9	28.1
500	508*) 521	670	28	38	34	620	75	542	7.1	12	16	585	4	20	M24	(7/8")	27	41.1	34.7
600	609.6*) 622	780	28			725	80	642	7.1	12	18	685	5	20	M27	(1")	30		
700	711.2*) 720	895	30			840	80	745	8.0	12	18	800	5	24	M27	(1")	30		
800	812.8*) 820	1015	32			950	90	850	8.0	12	18	905	5	24	M30	(1 1/8")	33		
900	914.4*) 920	1115	34			1050	95	950	10.0	12	20	1005	5	28	M30	(1 1/8")	33		
1000	1016*) 1020	1230	34			1160	95	1052	10.0	16	20	1110	5	28	M33	(1 1/8")	36		

Notes : Outside diameter of pipe complies with ISO recommendation R64

DIN

16BAR

DIN 2543 SLIP – ON FLANGES
DIN 2527 BLIND FLANGES
DIN 2633 WELDING NECK FLANGES

WELDING NECK

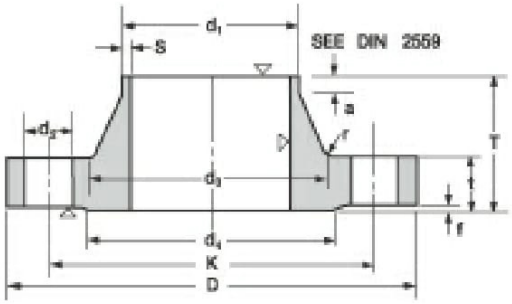

SLIP-ON

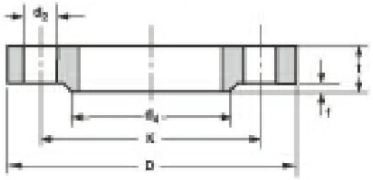

BLIND

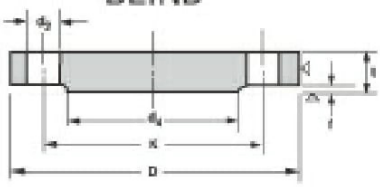

Unit : mm

Nominal Bore	Bore d1	Common Dimension D	t Welding Neck	t Slip-on	t Blind	K	T	Hub d3	S	r	a ≈	Raised Face d4	f	Drilling Number of Bolt	Dia.of Bolt		d2	Approx.Weight(kg) DIN 2543	DIN 2633
10	14 17.2*)	90	14	14	14	60	35	25 28	1.8	4	6	40	2	4	M12	(1/2")	14	0.63	0.580
15	20 21.3*)	95	14	14	14	65	35	30 32	2.0	4	6	45	2	4	M12	(1/2")	14	0.72	0.648
20	25 26.9*)	105	16	16	16	75	38	36 40	2.3	4	6	58	2	4	M12	(1/2")	14	1.01	0.952
25	30 33.7*)	115	16	16	16	85	38	42 45	2.6	4	6	68	2	4	M12	(1/2")	14	1.23	1.14
32	38 42.4*)	140	16	16	16	100	40	52 56	2.6	6	6	78	2	4	M16	(5/8")	18	1.80	1.69
40	44.5 48.3*)	150	16	16	16	110	42	60 64	2.6	6	7	88	3	4	M16	(5/8")	18	2.09	1.86
50	57 60.3*)	165	18	18	18	125	45	72 75	2.9	6	8	102	3	4	M16	(5/8")	18	2.88	2.53
65	76.1*)	185	18	18	18	145	45	90	2.9	6	10	122	3	4	M16	(5/8")	18	3.66	3.06
80	88.9*)	200	20	20	20	160	50	105	3.2	8	10	138	3	8	M16	(5/8")	18	4.77	3.70
100	108 114.3*)	220	20	20	20	180	52	125 131	3.6	8	12	158	3	8	M16	(5/8")	18	5.65	4.62
125	133 139.7*)	250	22	22	22	210	55	150 156	4.0	8	12	188	3	8	M16	(5/8")	18	8.42	6.30
150	159 168.3*)	285	22	22	22	240	55	175 184	4.5	10	12	212	3	8	M20	(3/4")	23	10.4	7.75
200	216 219.1*)	340	24	24	24	295	62	232 235	5.9	10	16	268	3	12	M20	(3/4")	23	16.1	11.0
250	267 273*)	405	26	26	26	355	70	285 292	6.3	12	16	320	3	12	M24	(7/8")	27	24.9	15.6
300	318	460	28	28	28	410	78	338 344	7.1	12	16	378	4	12	M24	(7/8")	27	35.1	22.0
350	355.6*) 368	520	30	30	30	470	82	390	8.0	12	16	438	4	16	M24	(7/8")	27	47.8	28.7
400	406.4*) 419	580	32	32	32	525	85	445	8.0	12	16	490	4	16	M27	(1")	30	63.5	36.3
500	508*) 521	715	34	36	34	650	90	548	8.0	12	16	610	4	20	M30	(1 1/8")	33	102.0	59.3
600	609.6*) 622	840	36	40		770	96	642	8.8	12	18	725	5	20	M33	(1 1/4")	36		
700	711.2*) 720	910	36			840	100	755	8.8	12	18	795	5	24	M33	(1 1/4")	36		
800	812.8*) 820	1025	38			950	105	855	10.0	12	20	900	5	24	M36	(1 3/8")	39		
900	914.4*) 920	1125	40			1050	110	955	10.0	12	20	1000	5	28	M36	(1 3/8")	39		
1000	1016*) 1020	1255	42			1170	120	1058	10.0	16	20	1115	5	28	M39	(1 1/2")	42		

Notes : Outside diameter of pipe complies with ISO recommendation R64

DIN

25BAR

DIN 2544 SLIP – ON FLANGES
DIN 2527 BLIND FLANGES
DIN 2634 WELDING NECK FLANGES

WELDING NECK

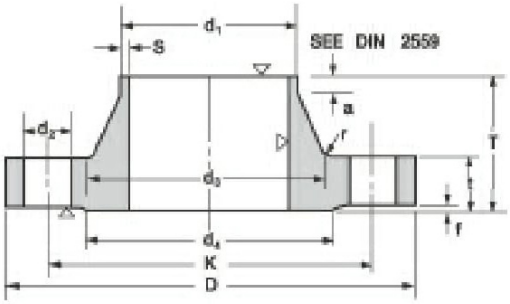

SLIP-ON

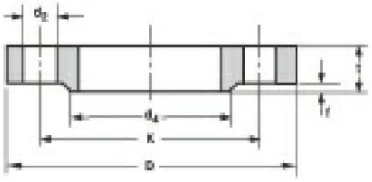

BLIND

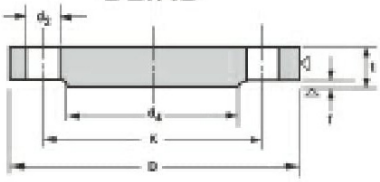

Unit : mm

Nominal Bore	Bore d1	Common Dimension D	t Welding Neck	t Slip-on	t Blind	K	T	Hub d0	S	r	a ≥	Raised Face d4	f	Drilling Number of Bolt	Dia.of Bolt		d3	Approx.Weight(kg) DIN 2544	DIN 2634
10	14 17.2*)	90	16	16	16	60	35	25 28	1.8	4	6	40	2	4	M12	(1/2")	14	0.72	0.661
15	20 21.3*)	95	16	16	16	65	38	30 32	2.0	4	6	45	2	4	M12	(1/2")	14	0.81	0.746
20	25 26.9*)	105	18	18	18	75	40	35 40	2.3	4	6	58	2	4	M12	(1/2")	14	1.24	1.06
25	30 33.7*)	115	18	18	18	85	40	42 46	2.6	4	6	68	2	4	M12	(1/2")	14	1.38	1.29
32	38 42.4*)	140	18	18	18	100	42	52 56	2.6	6	6	78	2	4	M16	(5/8")	18	2.03	1.88
40	44.5 48.3*)	150	18	18	18	110	45	60 64	2.6	6	7	88	3	4	M16	(5/8")	18	2.35	2.34
50	57 60.3*)	165	20	20	20	125	48	72 75	2.9	6	8	102	3	4	M16	(5/8")	18	3.20	2.82
65	76.1*)	185	22	22	22	145	52	90	2.9	6	10	122	3	8	M16	(5/8")	18	4.29	3.74
80	88.9*)	200	24	24	24	160	56	105	3.2	8	12	138	3	8	M16	(5/8")	18	5.88	4.75
100	108 114.3*)	235	24	24	24	190	65	128 134	3.6	8	12	162	3	8	M20	(3/4")	23	7.54	6.52
125	133 139.7*)	270	26	26	26	220	68	155 162	4.0	8	12	188	3	8	M24	(7/8")	27	10.8	9.07
150	159 168.3*)	300	28	28	28	250	75	182 192	4.5	10	12	218	3	8	M24	(7/8")	27	14.5	11.8
200	216 219.1*)	360	30	30	30	310	80	240 244	6.3	10	16	278	3	12	M24	(7/8")	27	22.3	17.0
250	267 273*)	425	32	32	32	370	88	292 298	7.1	12	18	335	3	12	M27	(1")	30	33.5	24.4
300	318	485	34	34	34	430	92	345 352	8.0	12	18	395	4	16	M27	(1")	30	46.3	31.2
350	355.6*) 368	555	38	38	38	490	100	398	8.0	12	20	450	4	16	M30	(1 1/4")	33	68.0	45.0
400	406.4*) 419	620	40	40	40	550	110	452	8.8	12	20	505	4	16	M33	(1 1/4")	36	89.7	58.7
500	508*) 521	730	44	44	44	660	125	558	10.0	12	20	615	4	20	M33	(1 1/4")	36	138.0	86.1
600	609.6*) 622	845	46			770	125	660	11.0	12	20	720	5	20	M36	(1 3/8")	39		101.0
700	711.2*) 720	960	46			875	125	760	12.5	12	20	820	5	24	M39	(1 1/2")	42		134.0
800	812.8*) 820	1085	50			990	135	865	14.2	12	22	930	5	24	M45	(1 3/4")	48		183.0
900	914.4*) 920	1185	54			1090	145	968	16.0	12	24	1030	5	28	M45	(1 3/4")	48		232.0
1000	1016*) 1020	1320	58			1210	155	1070	17.5	16	24	1140	5	28	M52	(2")	56		302.0

Notes : Outside diameter of pipe complies with ISO recommendation R64

DIN

40BAR

DIN 2545 SLIP – ON FLANGES
DIN 2527 BLIND FLANGES
DIN 2635 WELDING NECK FLANGES

WELDING NECK

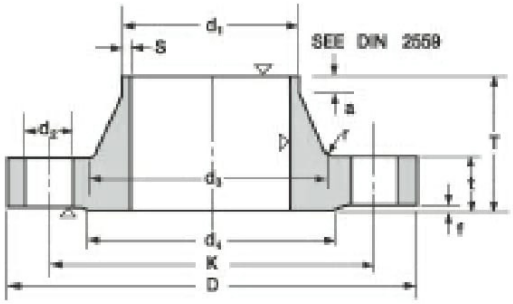

SLIP-ON

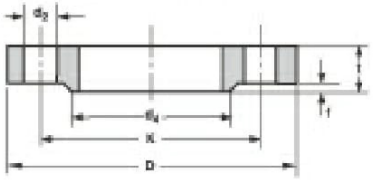

BLIND

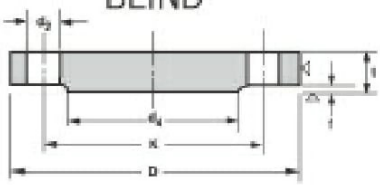

Unit : mm

Bore		Common Dimension					Hub					Raised Face		Drilling				Approx.Weight(kg)	
Nominal Bore	d1	D	t Welding Neck	t Slip-on	t Blind	K	T	d3	S	r	a ≈	d4	f	Number of Bolt	Dia.of Bolt		d2	DIN 2545	DIN 2635
10	14 17.2*)	90	16	16	16	60	35	25 28	1.8	4	6	40	2	4	M12	(1/2")	14	0.72	0.661
15	20 21.3*)	95	16	16	16	65	38	30 32	2.0	4	6	45	2	4	M12	(1/2")	14	0.81	0.746
20	25 26.9*)	105	18	18	18	75	40	38 40	2.3	4	6	58	2	4	M12	(1/2")	14	1.24	1.06
25	30 33.7*)	115	18	18	18	85	40	42 46	2.6	4	6	68	2	4	M12	(1/2")	14	1.38	1.29
32	38 42.4*)	140	18	18	18	100	42	52 56	2.6	6	6	78	2	4	M16	(5/8")	18	20.03	1.88
40	44.5 48.3*)	150	18	18	18	110	45	60 64	2.6	6	7	88	3	4	M16	(5/8")	18	2.35	2.33
50	57 60.3*)	165	20	20	20	125	48	72 75	2.9	6	8	102	3	4	M16	(5/8")	18	3.20	2.82
65	76.1*)	185	22	22	22	145	52	90	2.9	6	10	122	3	8	M16	(5/8")	18	4.29	3.74
80	88.9*)	200	24	24	24	160	58	105	3.2	8	12	138	3	8	M16	(5/8")	18	5.88	4.75
100	108 114.3 *)	235	24	24	24	190	65	128 134	3.6	8	12	162	3	8	M20	(3/4")	23	7.54	6.52
125	133 139.7*)	270	26	26	26	220	68	155 162	4.0	8	12	188	3	8	M24	(7/8")	27	10.8	9.07
150	159 168.3*)	300	28	28	28	250	75	182 192	4.5	10	12	218	3	8	M24	(7/8")	27	14.5	11.80
(175)	(191) 193.7*)	350	32	32	32	295	82	215 218	5.6	10	15	260	3	12	M27	(1")	30	22.1	18.2
200	216 219.1*)	375	34	34	34	320	88	240 244	6.3	10	16	285	3	12	M27	(1")	30	27.2	21.5
250	267 273*)	450	38	38	38	385	105	298 306	7.1	12	18	345	3	12	M30	(1 1/8")	33	43.6	34.9
300	318 323.9*)	515	42	42	42	450	115	352 362	8.0	12	18	410	4	16	M30	(1 1/8")	33	63.3	49.7
350	355.6*) 368	580	46	46	46	510	125	408	8.8	12	20	465	4	16	M33	(1 1/4")	36	89.5	68.1
400	406.4*) 419	660	50	50	50	585	135	462	11.0	12	20	535	4	16	M36	(1 3/8")	39	127.0	96.5
500	508*) 521	755	52	52	52	670	140	562	14.2	12	20	615	4	20	M39	(1 1/2")	42	172.0	117.0

Notes : Outside diameter of pipe complies with ISO recommendation R64

DIN

KS, JIS FLANGES

- Slip-On Flanges
  (5㎏/㎠~30㎏/㎠)
- Welding Neck Flanges
  (30㎏/㎠)

5K

JIS B 2220(KS B1503)
5K SLIP-ON WELDING STEEL PIPE FLANGES

NOMINAL SIZE 10-400A

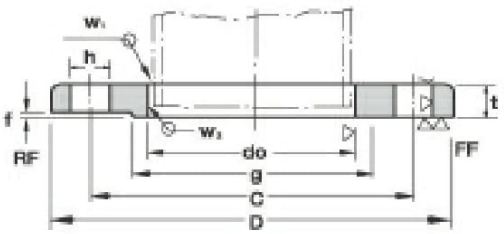

NOMINAL SIZE 450-1000A

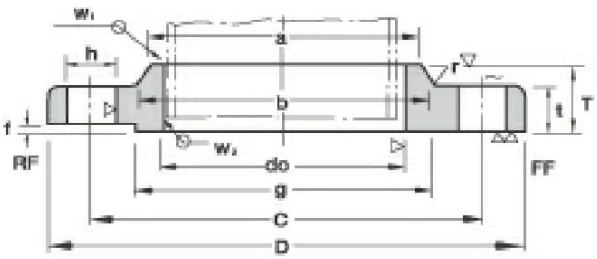

Unit : mm

Nominal Bore of Flange	Outside Diam. of Steel Pipe	Inside Diam. of Flange (do)	Outside Diam. of Flange (D)	Sectional Dimensions of Flange							Dia. of Bolt			Nominal Bolt size	Weight		Approx. Weight (kg)
				t	T	Diam. of Hub		Radius (r)	Raised Face (f)	Diam. of Raised Face (g)	Diam. of Bolt Circle (C)	Number of Bolt Holes	Hole Diam. (h)		W1	W2	
						a	b										
(10)	17.3	17.8	75	9	–	–	–	–	1	39	55	4	12	M10	5	2.5	0.27
15	21.7	22.2	80	9	–	–	–	–	1	44	60	4	12	M10	5	3	0.30
(20)	27.2	27.7	85	10	–	–	–	–	1	49	65	4	12	M10	5	3	0.37
25	34.0	34.5	95	10	–	–	–	–	1	59	75	4	12	M10	5	3	0.45
(32)	42.7	43.2	115	12	–	–	–	–	2	70	90	4	15	M12	6	3	0.78
40	48.6	49.1	120	12	–	–	–	–	2	75	95	4	15	M12	6	3	0.83
50	60.5	61.1	130	14	–	–	–	–	2	85	105	4	15	M12	6	3	1.07
65	76.3	77.1	155	14	–	–	–	–	2	110	130	4	15	M12	6	4	1.49
80	89.1	90.0	180	14	–	–	–	–	2	121	145	4	19	M16	6	4	1.99
(90)	101.6	102.6	190	14	–	–	–	–	2	131	155	4	19	M16	6	4	2.09
100	114.3	115.4	200	16	–	–	–	–	2	141	165	8	19	M16	7	4	2.39
125	139.8	141.2	235	16	–	–	–	–	2	176	200	8	19	M16	7	4	3.23
150	165.2	166.6	265	18	–	–	–	–	2	206	230	8	19	M16	7	5	4.41
(175)	190.7	192.1	300	18	–	–	–	–	2	232	260	8	23	M20	7.5	5	5.51
200	216.3	218.0	320	20	–	–	–	–	2	252	280	8	23	M20	8.5	6	6.33
225	241.8	243.7	345	20	–	–	–	–	2	277	305	12	23	M20	9	6	6.64
250	267.4	269.5	385	22	–	–	–	–	2	317	345	12	23	M20	10	6	9.45
300	318.5	321.0	430	22	–	–	–	–	3	360	390	12	23	M20	10	6	10.30
350	355.6	358.1	480	24	–	–	–	–	3	403	435	12	25	M22	12	7	14.00
400	406.4	409.0	540	24	–	–	–	–	3	463	495	16	25	M22	12	7	16.90
450	457.2	460.0	605	24	40	495	500	5	3	523	555	16	25	M22	12	7	24.80
500	508.0	511.0	655	24	40	546	552	5	3	573	605	20	25	M22	12	7	26.90
550	558.8	562.0	720	26	42	597	603	5	3	630	665	20	27	M24	12	7	34.10
600	609.6	613.0	770	26	44	648	654	5	3	680	715	20	27	M24	12	7	37.50
650	660.4	664.0	825	26	48	702	708	5	3	735	770	24	27	M24	12	7	42.80
700	711.2	715.0	875	26	48	751	758	5	3	785	820	24	27	M24	12	7	45.40
750	762.0	766.0	945	28	52	802	810	5	3	840	880	24	33	M30	12	7	57.40
800	812.8	817.0	995	28	52	854	862	5	3	890	930	24	33	M30	13	8	60.80
850	863.6	868.0	1045	28	54	904	912	5	3	940	980	24	33	M30	13	8	63.50
900	914.4	919.0	1095	30	56	956	964	5	3	990	1030	24	33	M30	13	8	75.30
1000	1016.0	1021.0	1195	32	60	1058	1066	5	3	1090	1130	28	33	M30	14	9	88.50
*(1100)	1117.6	1123.0	1305	32	–	–	–	–	3	1200	1240	28	33	M30	–	–	–
*1200	1219.2	1225.0	1420	34	–	–	–	–	3	1305	1350	32	33	M30	–	–	–
*1350	1371.6	–	1575	34	–	–	–	–	3	1460	1505	32	33	M30	–	–	–
*1500	1524.0	–	1730	36	–	–	–	–	3	1615	1660	36	33	M30	–	–	–

Notes: (1) Flanges of parenthesized nominal diameter had better not be used.
(2) The facing of flanges shall conform to KS B1519 (JIS B2202)
(3) Nominal diameter over 1000A is manufacture's standard(*)

10K

JIS B 2220(KS B1503)
10K SLIP-ON WELDING STEEL PIPE FLANGES

NOMINAL SIZE 10-225A

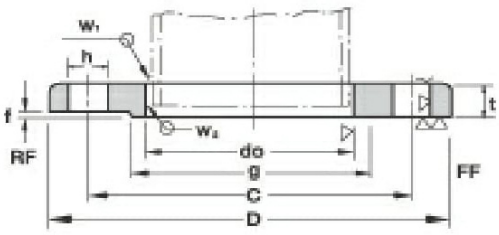

NOMINAL SIZE 250-1000A

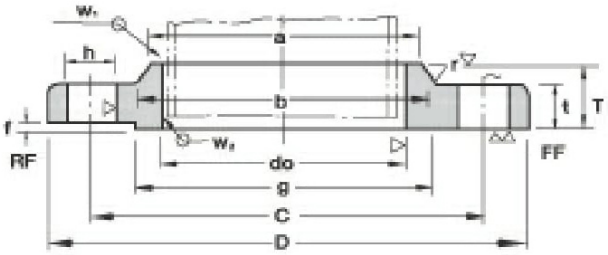

Unit : mm

Nominal Bore of Flange	Outside Diam. of Steel Pipe	Inside Diam. of Flange (do)	Outside Diam. of Flange (D)	Sectional Dimensions of Flange							Dia. of Bolt			Nominal Bolt size	Weld Length (Reference)		Approx. Weight (kg)
				t	T	Diam. of Hub		Radius (r)	Raised Face (f)	Diam. of Raised Face (g)	Diam. of Bolt Circle (C)	Number of Bolt Holes	Hole Diam. (h)		W1	W2	
						a	b										
10	17.3	17.8	90	12	-	-	-	-	1	46	65	4	15	M12	5	2.5	0.52
15	21.7	22.2	95	12	-	-	-	-	1	51	70	4	15	M12	5	3	0.57
20	27.2	27.7	100	14	-	-	-	-	1	56	75	4	15	M12	5	3	0.73
25	34.0	34.5	125	14	-	-	-	-	1	67	90	4	19	M16	5	3	1.13
32	42.7	43.2	135	16	-	-	-	-	2	76	100	4	19	M16	6	3	1.48
40	48.6	49.1	140	16	-	-	-	-	2	81	105	4	19	M16	6	3	1.56
50	60.5	61.1	155	16	-	-	-	-	2	96	120	4	19	M16	6	3	1.88
65	76.3	77.1	175	18	-	-	-	-	2	116	140	4	19	M16	6.5	4	2.6
80	89.1	90.0	185	18	-	-	-	-	2	126	150	8	19	M16	6.5	4	2.61
(90)	101.6	102.6	195	18	-	-	-	-	2	136	160	8	19	M16	6.5	4	2.76
100	114.3	115.4	210	18	-	-	-	-	2	151	175	8	19	M16	7	4	3.14
125	139.8	141.2	250	20	-	-	-	-	2	182	210	8	23	M20	7.5	4	4.77
150	165.2	166.6	280	22	-	-	-	-	2	212	240	8	23	M20	8	5	6.34
(175)	190.7	192.1	305	22	-	-	-	-	2	237	265	12	23	M20	9	5	6.82
200	216.3	218.0	330	22	-	-	-	-	2	262	290	12	23	M20	9	6	7.53
(225)	241.8	243.7	350	22	-	-	-	-	2	282	310	12	23	M20	9	6	7.74
250	267.4	269.5	400	24	36	288	292	6	2	324	355	12	25	M22	10	6	12.7
300	318.5	321.0	445	24	38	340	346	6	3	368	400	16	25	M22	10	6	13.8
350	355.6	358.1	490	26	42	380	386	6	3	413	445	16	25	M22	12	7	18.2
400	406.4	409.0	560	28	44	436	442	6	3	475	510	16	27	M24	12	7	25.2
450	457.2	460.0	620	30	48	496	502	6	3	530	565	20	27	M24	14	8	33
500	508.0	511.0	675	30	48	548	554	6	3	585	620	20	27	M24	14	8	37.6
550	558.8	562.0	745	32	52	604	610	6	3	640	680	20	33	M30	15	9	49.7
600	609.6	613.0	795	32	52	656	662	6	3	690	730	24	33	M30	16	10	52.6
650	660.4	664.0	845	34	56	706	712	6	3	740	780	24	33	M30	16	10	60.6
700	711.2	715.0	905	34	58	762	770	6	3	800	840	24	33	M30	17	10	70.6
750	762.0	766.0	970	36	62	816	824	6	3	855	900	24	33	M30	18	11	85.8
800	812.8	817.0	1020	36	64	868	876	6	3	905	950	28	33	M30	19	12	91.2
(850)	863.6	868.0	1070	36	66	920	928	6	3	955	1000	28	33	M30	19	12	96.6
900	914.4	919.0	1120	38	70	971	979	6	3	1005	1050	28	33	M30	22	14	109
1000	1016.0	1021.0	1235	40	74	1073	1081	6	3	1110	1160	28	39	M36	22	14	133
*(1100)	1117.6	1123.0	1345	42	-	-	-	-	3	1220	1270	28	39	M36	-	-	-
*1200	1219.2	1225.0	1465	44	-	-	-	-	3	1325	1380	32	39	M36	-	-	-
*1350	1371.6	-	1630	48	-	-	-	-	3	1480	1540	36	45	M42	-	-	-
1500	1524.0	-	1795	50	-	-	-	-	3	1635	1700	40	45	M42	-	-	-

Notes: (1) Flanges of parenthesized nominal diameter had better not be used.
(2) The facing of flanges shall conform to KS B1519 (JIS B2202)
(3) Nominal diameter over 1000A is manufacture's standard(*)

KS, JIS

16K

JIS B 2220(KS B1503)
16K SLIP-ON WELDING STEEL PIPE FLANGES

NOMINAL SIZE 10-600A

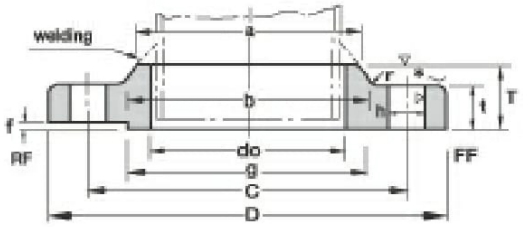

NOMINAL SIZE 650-1200A

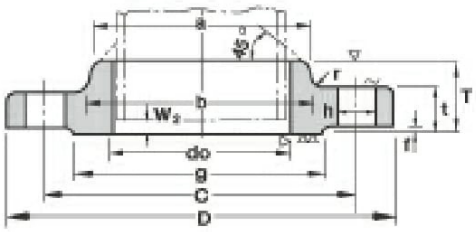

Unit : mm

Nominal Bore of Flange	Outside Diam. of Steel Pipe	Inside Diam. of Flange (do)	Outside Diam. of Flange (D)	Sectional Dimensions of Flange							Bolt Hole			Nominal Bolt size	Approx. Weight (kg)
				t	T	Diam. of Hub		Radius (r)	Raised Face (f)	Diam. of Raised Face (g)	Diam. of Bolt Circle (C)	Number of Bolt Holes	Hole Diam. (h)		
						a	b								
10	17.3	17.8	90	12	16	26	28	4	1	46	65	4	15	M12	0.52
15	21.7	22.2	95	12	16	30	32	4	1	51	70	4	15	M12	0.58
20	27.2	27.7	100	14	20	38	42	4	1	56	75	4	15	M12	0.75
25	34.0	34.5	125	14	20	46	50	4	1	67	90	4	19	M16	1.16
32	42.7	43.2	135	16	22	56	60	5	2	76	100	4	19	M16	1.53
40	48.6	49.1	140	16	24	62	66	5	2	81	105	4	19	M16	1.64
50	60.5	61.2	155	16	24	76	80	5	2	96	120	8	19	M16	1.83
65	76.3	77.1	175	18	26	94	98	5	2	116	140	8	19	M16	2.58
80	89.1	90.0	200	20	28	108	112	6	2	132	160	8	23	M20	3.66
90	101.6	102.6	210	20	30	120	124	6	2	145	170	8	23	M20	3.95
100	114.3	115.4	225	22	34	134	138	6	2	160	185	8	23	M20	4.94
125	139.8	141.2	270	22	34	164	170	6	2	195	225	8	25	M22	7.00
150	165.2	166.6	305	24	38	196	202	6	2	230	260	12	25	M22	9.62
200	216.3	218.0	350	26	40	244	252	6	2	275	305	12	25	M22	12.1
250	267.4	269.5	430	28	44	304	312	6	2	345	380	12	27	M24	20.0
300	318.5	321.0	480	30	48	354	364	8	3	395	430	16	27	M24	24.4
350	355.6	358.1	540	34	52	398	408	8	3	440	480	16	33	M30×3	35.0
400	406.4	409.0	605	38	60	446	456	10	3	495	540	16	33	M30×3	46.2
450	457.2	460.0	675	40	64	504	514	10	3	560	605	20	33	M30×3	61.9
500	508.0	511.0	730	42	68	558	568	10	3	615	660	20	33	M30×3	73.25
550	558.8	562.0	795	44	70	612	622	10	3	670	720	20	39	M36×3	88.1
600	609.6	613.0	845	46	74	666	676	10	3	720	770	24	39	M36×3	98.8
650	660.4	664.0	895	48	77	704	726	10	5	770	820	24	39	M36×3	101
700	711.2	715.0	960	50	80	754	776	10	5	820	875	24	42	M39×3	120
750	762.0	766.0	1020	52	83	806	832	10	5	880	935	24	42	M39×3	141
800	812.8	817.0	1085	54	86	865	885	10	5	930	990	24	48	M45×3	161
850	863.6	868.0	1135	56	89	916	936	10	5	980	1040	24	48	M45×3	177
900	914.4	919.0	1185	58	93	968	986	10	5	1030	1090	28	48	M45×3	191
1000	1016.0	1021	1320	62	99	1070	1098	12	5	1140	1210	28	56	M52×3	230
1100	1117.6	1123	1420	66	105	1180	1200	12	5	1240	1310	32	56	M52×3	289
1200	1219.2	1225	1530	70	112	1282	1302	12	5	1350	1420	32	56	M52×3	348

Notes: (1) Flanges of parenthesized nominal diameter had better not be used.
(2) For dimensional tolerance, refer to JIS B2203
(3) In principle material shall be SS41 specified in JIS G3101, SF440(SF45) specified in JIS G3201 and S20C(S25C) specified in JIS G4051, and shall be fit for welding.

20K

JIS B 2220(KS B1503)
20K SLIP-ON WELDING STEEL PIPE FLANGES

TYPE A
NOMINAL SIZE 10-50A

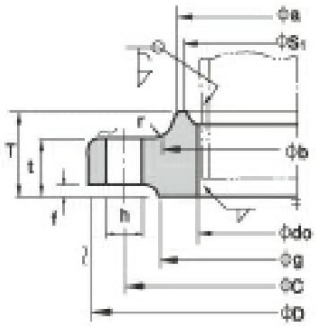

TYPE B
NOMINAL SIZE 10-50A

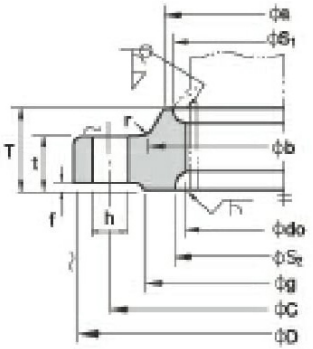

TYPE C
NOMINAL SIZE 65-600A

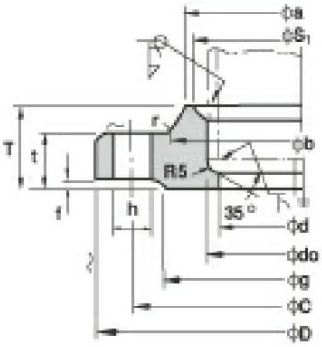

Unit : mm

Nominal Diam. of Flange	Outside Diam. of Steel Pipe	Inside Diam. of Flange (do)	Outside Diam. of Flange (D)	Sectional Dimensions of Flange								Bolt Hole			Nominal Bolt Size	Reference					Approx. Weight (kg)
				t	T	Diameter of Hub a	Diameter of Hub b	Radius (r)	Raised Face (f)	Diam of Raised Face (g)	d	Bolt Circle Diam. (C)	Number of Bolt Holes	Hole Diam. (h)		S1	m	S2	n	l	
10	17.3	17.8	90	14	20	30	32	4	1	46	-	65	4	15	M12	27	4	27	4		0.59
15	21.7	22.2	95	14	20	34	36	4	1	51	-	70	4	15	M12	31	4	31	4		0.65
20	27.2	27.7	100	16	22	40	42	4	1	56	-	75	4	15	M12	37	4	37	4		0.81
25	34.0	34.5	125	16	24	48	50	4	1	67	-	90	4	19	M16	44	4	44	4.5		1.29
32	42.7	43.2	135	18	26	56	60	5	2	76	-	100	4	19	M16	52	4	53	5		1.60
40	48.6	49.1	140	18	26	62	66	5	2	81	-	105	4	19	M16	58	4	59	5.5		1.69
50	60.5	61.1	155	18	26	76	80	5	2	96	-	120	8	19	M16	70	4	72	5.5		1.89
65	76.3	77.1	175	20	30	100	104	5	2	116	65.9	140	8	19	M16	94	6	85	6	6	2.60
80	89.1	90.0	200	22	34	113	117	6	2	132	78.1	160	8	23	M20	107	6			6	3.93
90	101.6	102.6	210	24	36	126	130	6	2	145	90.2	170	8	23	M20	120	6			6	4.56
100	114.3	115.4	225	24	36	138	142	6	2	160	102.3	185	8	23	M20	132	6			6	5.13
125	139.8	141.2	270	26	40	166	172	6	2	195	126.6	225	8	25	M22	160	7			6	8.30
150	165.2	166.6	305	28	42	196	202	6	2	230	151.0	280	12	25	M22	186	8			6	10.6
200	216.3	218.0	350	30	46	244	252	6	2	275	199.9	305	12	25	M22	237	9			6	13.3
250	267.4	269.5	430	34	52	304	312	6	2	345	248.8	380	12	27	M24	290	10			6	23.4
300	318.5	321.0	480	36	56	354	364	8	3	395	297.9	430	16	27	M24	345	11			6	27.7
350	355.6	358.1	540	40	62	398	408	8	3	440	333.4	480	16	33	M30×3	384	12			6	39.2
400	406.4	409.0	605	46	70	446	456	10	3	495	381.0	540	16	33	M30×3	437	13			7	54.2
450	457.2	460.0	675	48	78	504	514	10	3	560	431.8	605	20	33	M30×3	490	15			7	71.7
500	508.0	511.0	730	50	84	558	568	10	3	615	482.6	660	20	33	M30×3	544	16			7	86.2
550	558.8	562.0	795	52	90	612	622	10	3	670	533.4	720	20	39	M36×3	595	16			7	105
600	609.6	613.0	845	54	96	666	676	10	3	720	584.2	770	24	39	M36×3	646	18			7	119

Notes: (1) Flanges of parenthesized nominal diameter had better not be used.
(2) The Flange gasket surface is based on large raised facing specified in JIS B2202.
(3) Sized is an example of pipe thickness for schedule 40 of JIS G3454 and JIS G3456. But customers can order for other size as ocasion demand.
(4) For dimensional tolerance, refer to JIS B2203
(5) In principle material shall be SS41 specified in JIS G3101, SF440(SF45) specified in JIS G3201 and S20C(S25C) specified in JIS G4051, and shall be fit for welding.
*The surface finish is the case of forging.(▽ : other cases)

KS, JIS

30K

JIS B 2220(KS B1503)
30K SLIP-ON WELDING STEEL PIPE FLANGES

TYPE B
NOMINAL SIZE 10-50A

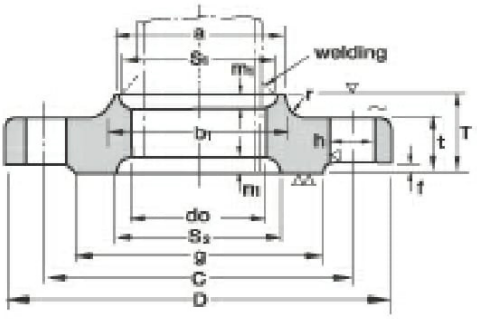

TYPE C
NOMINAL SIZE 65-400A

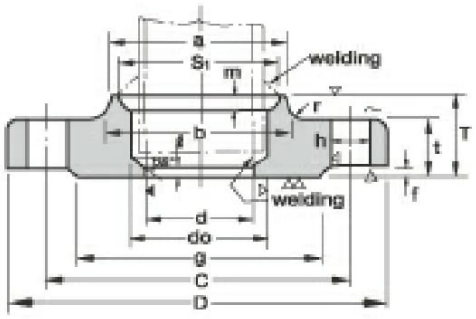

Unit : mm

Nominal Diam. of Flange	Outside Diam. of Steel Pipe	Inside Diam. of Flange (do)	Outside Diam. of Flange (D)	Sectional Dimensions of Flange								Bolt Hole			Nominal Bolt Size	Reference					Approx. Weight (kg)
				t	T	Diameter of Hub a	Diameter of Hub b	Radius (r)	Raised Face (f)	Diam of Raised Face (g)	d	Bolt Circle Diam. (C)	Number of Bolt Holes	Hole Diam. (h)		S1	m	S2	n	J	
10	17.3	17.8	110	16	24	30	34	4	1	52	–	75	4	19	M16	–	–	–	–	–	0.99
15	21.7	22.2	115	18	26	36	40	5	1	55	–	80	4	19	M16	31	4	40	5	–	1.23
20	27.2	27.7	120	18	28	42	46	5	1	60	–	85	4	19	M16	37	5	44	5	–	1.34
25	34.0	34.5	130	20	30	50	54	5	1	70	–	95	4	19	M16	44	6	52	5	–	1.76
32	42.7	43.2	140	22	32	60	64	6	2	80	–	105	4	19	M16	52	6	60	5	–	2.15
40	48.6	49.1	160	22	34	66	70	6	2	90	–	120	4	23	M20	58	6	66	5	–	2.82
50	60.5	61.1	165	22	36	82	86	6	2	105	–	130	8	19	M16	70	6.5	78	5	–	2.89
65	76.3	77.1	200	26	40	102	106	8	2	130	65.9	160	8	23	M20	96	9.5	94	5	6	4.70
80	89.1	90.0	210	28	44	115	121	8	2	140	78.1	170	8	23	M20	109	9.5	–	–	6	5.36
(90)	101.6	102.6	230	30	46	128	134	8	2	150	90.2	185	8	25	M22	122	9.5	–	–	6	6.85
100	114.3	115.4	240	32	48	141	147	8	2	160	102.3	195	8	25	M22	135	9.5	–	–	6	7.89
125	139.8	141.2	275	36	54	166	172	8	2	195	126.6	230	8	25	M22	160	9.5	–	–	6	11.4
150	165.2	166.6	325	38	58	196	204	8	2	235	151.0	275	12	27	M24	186	9.5	–	–	6	16.7
200	216.3	218.0	370	42	64	248	256	8	2	280	199.9	320	12	27	M24	237	9.5	–	–	6	20.6
250	267.4	269.5	450	48	72	306	314	10	2	345	248.8	390	12	33	M30×3	290	10	–	–	6	36.1
300	318.5	321.0	515	52	78	360	370	10	3	405	297.9	450	16	33	M30×3	345	12	–	–	6	49.9
350	355.6	358.1	560	54	84	402	412	12	3	450	333.4	495	16	33	M30×3	383	13	–	–	6	61.2
400	406.4	409.0	630	60	92	456	468	15	3	510	381.0	560	16	39	M36×3	435	14	–	–	7	85.2

Notes: (1) As far as possible nominal diameter in parenthesis should be avoid from use.
(2) The dimensional tolerance shall confirm to JIS B2203
(3) The flange gasket surface is based on large raised facing specified in JIS B2202. But if necessary facings other than the large raised facing specified in JIS B2201 can be designated by customers.
(4) Sized is an example of pipe thickness for schedule 40 of JIS G3454 and JIS B3456. When other size is necessary customers can order it at will.
(5) Material
Carbon Steel : S25C specified in JIS G4051, SF45 specified in JIS G3201.
Molybdenum Steel : 1/2 Mo Steel specified in tables 1 and 2 of JIS B2215.
Chromium-Molybdenum Steel : 1 1/4 Cr 1/2 Mo Steel specified in tables 1 and 2 of JIS B2215
*The surface finish is the case of forging.(▽ : other cases)

KS, JIS

30K

JIS B2220 (KS B1503)
WELDING NECK STEEL PIPE FLANGES

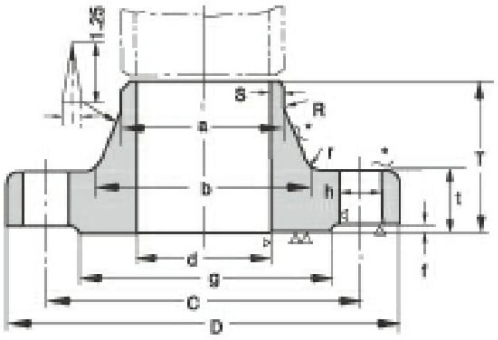

Reference : Beveling

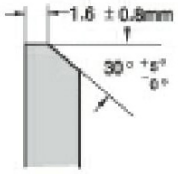

When particularly necessary, customers can order another beveling form the above.

Unit : mm

Nominal Diam. of Flange	Outside Diam. of Steel Pipe	Outside Diam. of Flange (D)	Sectional Dimensions of Flange										Dia.of Bolt			Nominal Bolt Size	Approx. Weight (kg)
			t	d	a	b	s	T	R	Radius (r)	f	g	Bolt Circle Diam. (C)	Number of Bolt Holes	Hole Diam (h)		
15	21.7	115	18	To be specified by purchaser.	22.0	40	To be specified by purchaser.	45	20	6	1	55	80	4	19	M16	1.33
20	27.2	120	18		27.5	44		45	20	6	1	60	85	4	19	M16	1.47
25	34.0	130	20		34.4	52		48	20	6	1	70	95	4	19	M16	1.95
32	42.7	140	22		43.1	62		52	30	6	2	80	105	4	19	M16	2.43
40	48.6	160	22		49.1	70		54	30	6	2	90	120	4	23	M20	3.16
50	60.5	165	22		61.0	84		57	30	8	2	105	130	8	19	M16	3.33
65	76.3	200	26		76.9	104		69	30	8	2	130	160	8	23	M20	5.91
80	89.1	210	28		89.7	118		73	30	8	2	140	170	8	23	M20	7.05
(90)	101.6	230	30		102.3	130		74	30	8	2	150	185	8	25	M22	8.54
100	114.3	240	32		115.1	142		76	30	8	2	160	195	8	25	M22	9.72
125	139.8	275	36		140.7	172		86	50	10	2	195	230	8	25	M22	14.4
150	165.2	325	38		166.2	202		95	50	10	2	235	275	12	27	M24	20.6
200	216.3	370	42		217.5	254		102	50	10	2	280	320	12	27	M24	28.7
250	267.4	450	48		268.7	312		118	50	12	2	345	390	12	33	M30×3	47.3
300	318.5	515	52		320.0	366		127	50	15	3	405	450	16	33	M30×3	62.8
350	355.6	560	54		357.2	406		134	80	15	3	450	495	16	33	M30×3	77.0
400	406.4	630	60		408.3	462		149	80	20	3	510	560	16	39	M36×3	108.0

Notes: (1) Flanges of parenthesized nominal diameter had better not be used.
(2) The flange gasket surface is based on "large raised facing"specified in JIS B2202. If necessary customers can order for other types of facing.
(3) For dimensional tolerance, refer to JIS B2203
(4) The surface finish shown above is in the case of forging(▽ : other cases)

KS, JIS

TOLERANCE FOR PIPE FLANGES

KS B1502
JIS B2203

SOLID

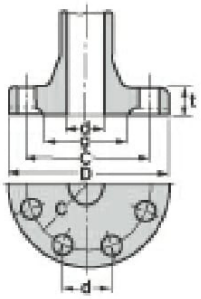

SLIP-ON

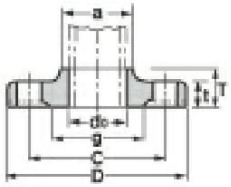

WELDING NECK

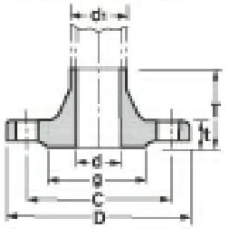

TYPE OF GASKET SURFACE

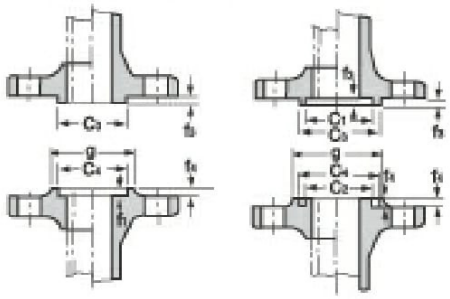

MALE & FEMALE TYPE

TONGUE & GROOVE TYPE

Unit : mm

Flange Section		Surface Condition	Basic Size	Dimensional Tolerance
Outside Dia. D		As Forged (1)	300 & below	+Not Specified −2.0
			over 300 thru 600	
			over 600 thru 1000	
			over 1000 thru 1500	+Not Specified −3.0
			over 1500	
		Finish	300 & below	±1
			over 300 thru 600	±1.5
			over 600 thru 1000	±2
			over 1000 thru 1500	±2.5
			over 1500	±3
Inside Dia.	Solid Flange d (2)	AS Forged (1)	16 & below	±1
			over 16 thru 63	±1.5
			over 63 thru 125	±2
			over 125 thru 150	±2.5
			over 250 thru 500	±3
			over 500 thru 1000	±4
			over 1000	±5
	Slip-on Flange do	Finish	100 & below	$^{+0.5}_{0}$
			over 100 thru 400	$^{+1}_{0}$
			over 400 thru 600	$^{+1.5}_{0}$
			over 600 thru 800	$^{+2}_{0}$
			over 800 thru 1000	$^{+2.5}_{0}$
			over 1000	$^{+3}_{0}$
	Welding Neck Flange d		100 & below	$^{0}_{-0.5}$
			over 100 thru 400	$^{0}_{-1}$
			over 400 thru 600	$^{0}_{-1.5}$
			over 600 thru 800	$^{0}_{-2}$
			over 800 thru 1000	$^{0}_{-2.5}$
			over 1000	$^{0}_{-3}$
Bolt Hole	Bolt Circle Dia. C		250 & below	±0.5
			over 250 thru 550	±0.6
			over 550 thru 950	±0.8
			over 950 thru 1350	±1
			over 1350	±1.5

Flange Section		Surface Condition	Basic Size	Dimensional Tolerance
Bolt Hole	Pitch of Hole P	Drilling Hole	–	±0.5
Dia. of Hub	Slip-on Flange (a) and Welding Neck Flange (d_1)	As Forged	220 & below	$^{+3}_{0}$
			over 220 thru 450	$^{+3}_{0}$
			over 450 thru 650	$^{+3}_{0}$
			over 650 thru 850	$^{+3}_{0}$
			over 850 thru 1000	$^{+3}_{0}$
			over 1000	$^{+4}_{0}$
		Finish	220 & below	$^{+1}_{0}$
			over 220 thru 450	$^{+1.5}_{0}$
			over 450 thru 650	$^{+2}_{0}$
			over 650 thru 850	$^{+2.5}_{0}$
			over 850 thru 1000	$^{+3}_{0}$
			over 1000	$^{+3.5}_{0}$
Gasket Seat	C_1, C_2 C_3, C_4	Finish	500 & below	±0.2
			over 500 thru 1000	±0.25
			over 1000 thru 1500	±0.4
			over 1500	±0.5
	f_4, f_5	Finish	8 & below	±0.2
			over 8	±0.25
	g	Finish	200 & below	±0.4
			over 200 thru 650	±0.9
			over 650 thru 1000	±1
			over 1000	±1.3
Thickness t		One-side Finish	20 & below	$^{+1.5}_{0}$
			over 20 thru 50	$^{+2}_{0}$
			over 50 thru 100	$^{+3}_{0}$
		Both-side Finish	20 & below	$^{+1}_{0}$
			over 20 thru 50	$^{+1.5}_{0}$
			over 50 thru 100	$^{+2}_{0}$
Hub Height T	Flange with Pipe Inserted	Finish	50 & below	±1
			over 50 thru 100	±1.5
			over 100 thru 200	±2
	Flange with Butt-Welded PIPE	Finish	over 200 & below	$^{+2}_{0}$
			over 200 thru 300	$^{+3}_{0}$

Notes

(1) This dimensional tolerance applies to the machined surface, as required.

(2) This dimensional d has been specified only for the flange, of which the bore part is cylidrical in shape.

Remarks

(1) The dimensional d of bore part of the solid flanges with surface, as forged valves, pumps, etc are allowed up to plus 100% of the above dimensional tolerance, Provided that the required thickness shall be free from its influence.

(2) The thickness of flange of valve and the like, of which the dimension between flange faces is limited to a fixed value, are allowed up to plus 100% of the above dimensional tolerance in the column of thickness.

(3) In the case of spot facing of the single surface finishing, the thickness of spot facing is allowed up to 70% of the dimensional tolerance in the above column of thickness in negative side.

(4) The chain double-dashed lines in the figures of solid flange and socket welding type flange illustrate the cases of large raised face flange.

NOMINAL PIPE OF WELDED AND SEAMLESS PIPE

ANSI B36.19

Unit : mm

Nominal Pipe Size		Outside Diameter		Nominal Wall Thickness And Inside Diameter											
				SPP/SGP		Sch 5s		Sch 10s		Sch 20s		Sch 40s		Sch 80s	
A	NPS	KS/JIS	ANSI	WALL	I・D	WALL	I・D	WALL	I・D	WALL	I・D	WALL	I・D	WALL	I・D
6	1/8	10.5	10.3	–	–	–	–	1.24	7.8	1.5	7.3	1.73	6.8	2.41	5.5
8	1/4	13.8	13.7	–	–	–	–	1.65	10.4	2.0	9.7	2.24	9.2	3.02	7.7
10	3/8	17.3	17.1	–	–	–	–	1.65	13.8	2.0	13.1	2.31	12.5	3.20	10.7
15	1/2	21.7	21.3	2.8	16.1	1.65	18.0	2.11	17.1	2.5	16.3	2.77	15.8	3.73	13.8
20	3/4	27.2	26.7	2.8	21.6	1.65	23.4	2.11	22.5	2.5	21.7	2.87	21.0	3.91	18.9
25	1	34.0	33.4	3.2	27.6	1.65	30.1	2.77	27.9	3.0	27.4	3.38	26.6	4.55	24.3
32	1 1/4	42.7	42.2	3.5	35.7	1.65	38.9	2.77	36.7	3.0	36.2	3.56	35.1	4.85	32.5
40	1 1/2	48.6	48.3	3.5	41.6	1.65	45.0	2.77	42.8	3.0	42.3	3.68	40.9	5.08	38.1
50	2	60.5	60.3	3.8	52.9	1.65	57.0	2.77	54.8	3.5	53.3	3.91	52.5	5.54	49.2
65	2 1/2	76.3	73.0	4.2	67.9	2.11	68.8	3.05	66.9	3.5	66.0	5.16	62.7	7.01	59.0
80	3	89.1	88.9	4.2	80.7	2.11	84.7	3.05	82.8	4.0	80.9	5.49	77.9	7.62	73.7
90	3 1/2	101.6	101.6	4.2	93.2	2.11	97.4	3.05	95.5	4.0	93.6	5.74	90.1	8.08	85.4
100	4	114.3	114.3	4.5	105.3	2.11	110.1	3.05	108.2	4.0	106.3	6.02	102.3	8.56	97.2
125	5	139.8	141.3	4.5	130.8	2.77	135.8	3.40	134.5	5.0	131.3	6.55	128.2	9.53	122.2
150	6	165.2	168.3	5.0	155.2	2.77	162.8	3.40	161.5	5.0	158.3	7.11	154.1	10.97	146.4
200	8	216.3	219.1	5.8	204.7	2.77	213.6	3.76	211.6	6.5	206.1	8.18	202.7	12.70	193.7
250	10	267.4	273.0	6.6	254.2	3.40	266.2	4.19	264.6	6.5	260.0	9.27	254.5	12.70	247.6
300	12	318.5	323.8	6.9	304.7	3.96	315.9	4.57	314.7	6.5	310.8	9.52	304.8	–	–
350	14	355.6	355.6	7.9	339.8	3.96	347.7	4.78	346.0	–	–	–	–	–	–
400	16	406.4	406.4	7.9	390.6	4.19	398.0	4.78	396.8	–	–	–	–	–	–
450	18	457.2	457.0	7.9	441.4	4.19	448.6	4.78	447.4	–	–	–	–	–	–
500	20	508.0	508.0	7.9	492.2	4.78	498.4	5.54	496.9	–	–	–	–	–	–
550	22	558.8	559.0	–	–	4.78	549.4	5.54	547.9	–	–	–	–	–	–
600	24	609.6	610.0	–	–	5.54	598.9	6.35	597.3	–	–	–	–	–	–
650	26	660.4	660.0	–	–	–	–	–	–	–	–	–	–	–	–
700	28	711.2	711.0	–	–	–	–	–	–	–	–	–	–	–	–
750	30	762.0	762.0	–	–	6.35	749.3	–	–	–	–	–	–	–	–
800	32	812.8	813.0	–	–	–	–	–	–	–	–	–	–	–	–
850	34	863.6	864.0	–	–	–	–	–	–	–	–	–	–	–	–
900	36	914.4	914.0	–	–	–	–	–	–	–	–	–	–	–	–
950	38	965.2	965.0	–	–	–	–	–	–	–	–	–	–	–	–
1000	40	1016.0	1016.0	–	–	–	–	–	–	–	–	–	–	–	–
1050	42	1066.8	1067.0	–	–	–	–	–	–	–	–	–	–	–	–
1100	44	1117.6	1118.0	–	–	–	–	–	–	–	–	–	–	–	–
1150	46	1168.4	1168.0	–	–	–	–	–	–	–	–	–	–	–	–
1200	48	1219.2	1219.0	–	–	–	–	–	–	–	–	–	–	–	–

NOMINAL PIPE OF WELDED AND SEAMLESS PIPE

ANSI B36.10

Unit : mm

Nominal Pipe Size		Outside Diameter		Nominal Wall Thickness And Inside Diameter											
				Sch 10		Sch 20		Sch 30		STD		Sch 40		Sch 60	
A	NPS	KS/JIS	ANSI	WALL	I • D	WALL	I • D	WALL	I • D	WALL	I • D	WALL	I • D	WALL	I • D
6	1/8	10.5	10.3	–	–	–	–	–	–	1.73	6.8	1.73	6.8	–	–
8	1/4	13.8	13.7	–	–	–	–	–	–	2.24	9.2	2.24	9.2	–	–
10	3/8	17.3	17.1	–	–	–	–	–	–	2.31	12.5	2.31	12.5	–	–
15	1/2	21.7	21.3	–	–	–	–	–	–	2.77	15.8	2.77	15.8	–	–
20	3/4	27.2	26.7	–	–	–	–	–	–	2.87	21.0	2.87	21.0	–	–
25	1	34.0	33.4	–	–	–	–	–	–	3.38	26.6	3.38	26.6	–	–
32	1 1/4	42.7	42.2	–	–	–	–	–	–	3.56	35.1	3.56	35.1	–	–
40	1 1/2	48.6	48.3	–	–	–	–	–	–	3.68	40.9	3.68	40.9	–	–
50	2	60.5	60.3	–	–	–	–	–	–	3.91	52.5	3.91	52.5	–	–
65	2 1/2	76.3	73.0	–	–	–	–	–	–	5.16	62.7	5.16	62.7	–	–
80	3	89.1	88.9	–	–	–	–	–	–	5.49	77.9	5.49	77.9	–	–
90	3 1/2	101.6	101.6	–	–	–	–	–	–	5.74	90.1	5.74	90.1	–	–
100	4	114.3	114.3	–	–	–	–	–	–	6.02	102.3	6.02	102.3	–	–
125	5	139.8	141.3	–	–	5.10	131.1	–	–	6.55	128.2	6.55	128.2	–	–
150	6	165.2	168.3	–	–	5.50	157.3	–	–	7.11	154.1	7.11	154.1	–	–
200	8	216.3	219.1	–	–	6.35	206.4	7.04	205.0	8.18	202.7	8.18	202.7	10.31	198.5
250	10	267.4	273.0	–	–	6.35	260.3	7.80	257.4	9.27	254.5	9.27	254.5	12.70	247.6
300	12	318.5	323.8	–	–	6.35	311.1	8.38	307.0	9.53	304.7	10.31	303.2	14.27	295.3
350	14	355.6	355.6	6.35	342.9	7.92	339.8	9.53	336.5	9.53	336.5	11.13	333.3	15.09	325.4
400	16	406.4	406.4	6.35	393.7	7.92	390.6	9.53	387.3	9.53	387.3	12.70	381.0	16.66	373.1
450	18	457.2	457.0	6.35	444.3	7.92	441.2	11.13	434.7	9.53	437.9	14.27	428.5	19.05	418.9
500	20	508.0	508.0	6.35	495.3	9.53	488.9	12.70	482.6	9.53	488.9	15.09	477.8	20.62	466.8
550	22	558.8	559.0	6.35	546.3	9.53	539.9	12.70	533.6	9.53	539.9	–	–	22.23	514.5
600	24	609.6	610.0	6.35	597.3	9.53	590.9	14.27	581.5	9.53	590.9	17.48	575.0	24.61	560.8
650	26	660.4	660.0	7.92	644.2	12.70	634.6	–	–	9.53	640.9	–	–	–	–
700	28	711.2	711.0	7.92	695.2	12.70	685.6	15.88	679.2	9.53	691.9	–	–	–	–
750	30	762.0	762.0	7.92	746.2	12.70	736.6	15.88	730.2	9.53	742.9	–	–	–	–
800	32	812.8	813.0	7.92	797.2	12.70	787.6	15.88	781.2	9.53	793.9	17.48	778.0	–	–
850	34	863.6	864.0	7.92	848.2	12.70	838.6	15.88	832.2	9.53	844.9	17.48	829.0	–	–
900	36	914.4	914.0	7.92	898.2	12.70	888.6	15.88	882.2	9.53	894.9	19.05	875.9	–	–
950	38	965.2	965.0	–	–	–	–	–	–	9.53	945.9	–	–	–	–
1000	40	1016.0	1016.0	–	–	–	–	–	–	9.53	996.9	–	–	–	–
1050	42	1066.8	1067.0	–	–	–	–	–	–	9.53	1047.9	–	–	–	–
1100	44	1117.6	1118.0	–	–	–	–	–	–	9.53	1098.9	–	–	–	–
1150	46	1168.4	1168.0	–	–	–	–	–	–	9.53	1148.9	–	–	–	–
1200	48	1219.2	1219.0	–	–	–	–	–	–	9.53	1199.9	–	–	–	–

NOMINAL PIPE OF WELDED AND SEAMLESS PIPE

ANSI B36.10

Unit : mm

Nominal Pipe Size	Nominal Wall Thickness And Inside Diameter													
	X.S		Sch 80		Sch 100		Sch 120		Sch 140		Sch 160		XXS	
NPS	WALL	I • D	WALL	I • D	WALL	I • D	WALL	I • D	WALL	I • D	WALL	I • D	WALL	I • D
1/8	2.41	5.5	2.41	5.5	–	–	–	–	–	–	3.15	4.0	4.83	0.6
1/4	3.02	7.7	3.02	7.7	–	–	–	–	–	–	3.68	6.3	6.05	1.6
3/8	3.20	10.7	3.20	10.7	–	–	–	–	–	–	4.01	9.1	6.40	4.3
1/2	3.73	13.8	3.73	13.8	–	–	–	–	–	–	4.78	11.7	7.47	6.4
3/4	3.91	18.9	3.91	18.9	–	–	–	–	–	–	5.56	15.6	7.82	11.1
1	4.55	24.3	4.55	24.3	–	–	–	–	–	–	6.35	20.7	9.09	15.2
1 1/4	4.85	32.5	4.85	32.5	–	–	–	–	–	–	6.35	29.5	9.70	22.8
1 1/2	5.08	38.1	5.08	38.1	–	–	–	–	–	–	7.14	34.0	10.15	28.0
2	5.54	49.2	5.54	49.2	–	–	–	–	–	–	8.74	42.8	11.07	38.2
2 1/2	7.01	59.0	7.01	59.0	–	–	–	–	–	–	9.53	53.9	14.02	45.0
3	7.62	73.7	7.62	73.7	–	–	–	–	–	–	11.13	66.6	15.24	58.4
3 1/2	8.08	85.4	8.08	85.4	–	–	–	–	–	–	–	–	–	–
4	8.56	97.2	8.56	97.2	–	–	11.13	92.0	–	–	13.49	87.3	17.12	80.1
5	9.53	122.2	9.53	122.2	–	–	12.70	115.9	–	–	15.88	109.5	19.05	103.2
6	10.97	146.4	10.97	146.4	–	–	14.27	139.8	–	–	18.26	131.8	21.95	124.4
8	12.70	193.7	12.70	193.7	15.09	188.9	18.26	182.6	20.62	177.9	23.01	173.1	22.23	174.6
10	12.70	247.6	15.09	242.8	18.26	236.5	21.44	230.1	25.40	222.2	28.58	215.8	25.40	222.2
12	12.70	298.4	17.48	288.8	21.44	280.9	25.40	273.0	28.58	266.6	33.32	257.2	25.40	273.0
14	12.70	330.2	19.05	317.5	23.83	307.9	27.79	300.0	31.75	292.1	35.71	284.2	–	–
16	12.70	381.0	21.44	363.5	26.19	354.0	30.96	344.5	36.63	333.1	40.49	325.4	–	–
18	12.70	431.6	23.83	409.3	29.36	398.3	34.93	387.1	39.67	377.7	45.24	366.5	–	–
20	12.70	482.6	26.19	455.6	32.54	442.9	38.10	431.8	44.45	419.1	50.01	408.0	–	–
22	12.70	533.6	28.58	501.8	34.93	489.1	41.28	476.4	47.63	463.7	53.98	451.0	–	–
24	12.70	584.6	30.96	548.1	38.89	532.2	46.02	518.0	52.37	505.3	59.54	490.9	–	–
26	12.70	634.6	–	–	–	–	–	–	–	–	–	–	–	–
28	12.70	685.6	–	–	–	–	–	–	–	–	–	–	–	–
30	12.70	736.6	–	–	–	–	–	–	–	–	–	–	–	–
32	12.70	787.6	–	–	–	–	–	–	–	–	–	–	–	–
34	12.70	838.6	–	–	–	–	–	–	–	–	–	–	–	–
36	12.70	888.6	–	–	–	–	–	–	–	–	–	–	–	–
38	12.70	939.6	–	–	–	–	–	–	–	–	–	–	–	–
40	12.70	990.6	–	–	–	–	–	–	–	–	–	–	–	–
42	12.70	1041.6	–	–	–	–	–	–	–	–	–	–	–	–
44	12.70	1092.6	–	–	–	–	–	–	–	–	–	–	–	–
46	12.70	1142.6	–	–	–	–	–	–	–	–	–	–	–	–
48	12.70	1193.6	–	–	–	–	–	–	–	–	–	–	–	–

ASTM MATERIAL SPECIFICATIONS

ASTM	Classification	CHEMISTRY(%)-MAX									MECHANICAL PROPERTIES				
		C	Mn	P	S	Si	Ni	Cr	Mo	Other	T.S Min KSI	Y.S Min KSI	EL. Min %	Red Min %	HB
A105	Carbon Steel	0.35	0.60 -1.05	0.04	0.05	0.10 -0.35	0.40	0.30	0.12	Cu, V, Nb	70	36	22	30	Max 187
A182-F1	Carbon-Mo	0.28	0.60 -0.90	0.045	0.045	0.10 -0.35	-	-	0.44 -0.65	-	70	40	20	30	143 -192
A182-F5	4-6% Cr	0.15	0.30 -0.60	0.03	0.03	0.50	0.50	4.0 -6.0	0.44 -0.65	-	70	40	20	35	143 -217
A182-F9	9% Cr	0.15	0.30 -0.60	0.03	0.03	0.50 -1.0	-	8.0 -10.0	0.90 -1.10	-	85	55	20	40	179 -217
A182-F11 (CL2)	1.25% Cr-0.5% Mo	0.10 -0.20	0.30 -0.80	0.04	0.04	0.50 -1.0	-	1.0 -1.5	0.44 -0.65	-	70	40	20	30	143 -207
A182-F12 (CL2)	1% Cr-0.5% Mo	0.10 -0.20	0.30 -0.80	0.04	0.04	0.10 -0.60	-	0.8 -1.25	0.44 -0.65	-	70	40	20	30	143 -207
A182-F22 (CL3)	2% Cr-1% Mo	0.05 -0.15	0.30 -0.60	0.04	0.04	0.50	-	2.0 -2.5	0.87 -1.13	-	75	45	20	30	156 -207
A182-F304	18% Cr-8% Ni	0.08	2.00	0.045	0.03	1.00	8.0 -11.0	18.0 -20.0	-	N 0.10	75	30	30	50	-
A182-F304L	18% Cr-8% Ni (Low-Carbon)	0.035	2.00	0.045	0.03	1.00	8.0 -13.0	18.0 -20.0	-	N 0.10	70	25	30	50	-
A182-F316	18% Cr-8% Ni-Mo	0.08	2.00	0.045	0.03	1.00	10.0 -14.0	16.0 -18.0	2.0 -3.0	N 0.10	75	30	30	50	-
A182-F316L	18% Cr-8% Ni-Mo (Low-Carbon)	0.035	2.00	0.045	0.03	1.00	10.0 -15.0	16.0 -18.0	2.0 -3.0	N 0.10	70	25	30	50	-
A182-F317	19% Cr-13% Ni-3.5% Mo	0.08	2.00	0.045	0.03	1.00	11.0 -15.0	18.0 -20.0	3.0 -4.0	-	75	30	30	50	-
A182-F317L	19% Cr-13% Ni-3.5% Mo (Low-Carbon)	0.03	2.00	0.045	0.03	1.00	11.0 -15.0	18.0 -20.0	3.0 -4.0	-	70	25	30	50	-
A182-F321	18% Cr-8% Ni-Ti	0.08	2.00	0.045	0.03	1.00	9.0 -12.0	Min 17	-	Ti 5×C -0.7%	75	30	30	50	-
A182-F347	18% Cr-8% Ni-Cb-Ta	0.08	2.00	0.045	0.03	1.00	9.0 -13.0	17.0 -20.0	-	Nb+Ta 10×C-1.1%	75	30	20	50	-
A350-LF2	Carbon-Low Alloy	0.30	0.60 -1.35	0.035	0.04	0.15 -0.30	0.40	0.30	0.12	Cu, V, Nb	70 -95	36	22	30	Impact -45.6°C
B151-C70600	Cu-Ni	Ni 9.0 -11.0	Pb Max 0.5	Fe 1.0 -1.8	Zm Max 1.0	S Max 0.2	P Max 0.2	Cu Re							

JIS MATERIAL SPECIFICATIONS

JIS	Classification	CHEMISTRY(%)-MAX									MECHANICAL PROPERTIES				
		C	Mn	P	S	Si	Ni	Cr	Mo	Other	T.S Min N/㎟	Y.S Min N/㎟	EL. Min %	Red Min %	HB
G3202	SPVC 2A	0.35	0.40 -1.10	0.03	0.03	0.35	-	-	-	-	490 -640	245	18	33	-
G4051	S20C	0.18 -0.23	0.30 -0.60	0.03	0.035	0.15 -0.35	-	-	-	-	400	245	28	-	116 -174
G4051	S25C	0.22 -0.28	0.30 -0.60	0.03	0.035	0.15 -0.35	-	-	-	-	440	265	27	-	123 -183
G4051	S45C	0.42 -0.48	0.60 -0.90	0.03	0.035	0.15 -0.35	-	-	-	-	570	345	20	-	167 -229
G3101	SS41(400)	-	-	0.05	0.05	-	-	-	-	-	400 -510	245 235 215	φ17 φ21 φ23	-	-
G3201	SF45A(440)	0.60	0.30 -1.20	0.03	0.035	0.15 -0.50	-	-	-	-	400 -540	225	24	45	Min 121
G3203	SFVA F1	0.30	0.60 -0.90	0.03	0.03	0.35	-	-	0.45 -0.65	-	480 -660	275	18	35	-
G3203	SFVA F5B	0.15	0.30 -0.60	0.03	0.03	0.50	-	4.0 -6.0	0.45 -0.65	-	480 -660	275	18	35	-
G3203	SFVA F9	0.15	0.30 -0.60	0.03	0.03	0.5 -1.0	-	8.0 -10.0	0.9 -1.1	-	590 -760	380	18	40	-
G3203	SFVA F11A	0.20	0.30 -0.80	0.03	0.03	0.5 -1.0	-	1.0 -1.5	0.45 -0.65	-	480 -660	275	18	35	-
G3203	SFVA F22B	0.15	0.30 -0.60	0.03	0.03	0.50	-	2.0 -2.5	0.9 -1.1	-	520 -690	315	18	35	-
G3214	SUS F304	0.08	2.00	0.04	0.03	1.00	8.0 -11.0	18.0 -20.0	-	-	520	205	43	50	Max 187
G3214	SUS F304L	0.03	2.00	0.04	0.03	1.00	9.0 -13.0	18.0 20.0	-	-	480	175	29	50	Max 187
G3214	SUS F316	0.08	2.00	0.04	0.03	1.00	10.0 -14.0	16.0 -18.0	2.0 -3.0	-	520	205	43	50	Max 187
G3214	SUS F316L	0.03	2.00	0.04	0.03	1.00	12.0 -15.0	16.0 -18.0	2.0 -3.0	-	480	175	29	50	Max 187
G3214	SUS F317	0.08	2.00	0.04	0.03	1.00	11.0 -15.0	18.0 -20.0	3.0 -4.0	-	520	205	29	50	Max 187
G3214	SUS F317L	0.03	2.00	0.04	0.03	1.00	11.0 -15.0	18.0 -20.0	3.0 -4.0	-	480	175	29	50	Max 187
G3214	SUS F321	0.08	2.00	0.04	0.03	1.00	9.0 -12.0	Min 17	-	Ti 5×C -0.6	520	205	43	50	Max 187
G3214	SUS F347	0.08	2.00	0.04	0.03	1.00	9.0 -13.0	17.0 -20.0	-	Nb 10×C -1.0	520	205	43	50	Max 187
G4303	SUS 410	0.15	1.00	0.04	0.03	1.00	0.60	11.5 -13.5	-	-	540	345	25	55	Min 159

COMPARISON OF ASTM SPECIFICATIONS AND SIMILAR STANDADARDS

STEEL DOMPOSITION	ASTM Specification And Grade				
	UNS Designation	Making Symbol	Pipe	Plate	Forging
Carbon Steel			A120	A283-A	
			A53-B	A284	
			A53-B	A284	
		WPB	A106-B	A515-60 or 70	A105
		WPC	A106-C	A516- 70	
Low Temperature Steel		WPL6	A333 & A334-6	A516-70	A350-LF2
		WPL3	A333 & A334-3	A203-D	A350-LF3
		WPL9	A333 & A334-9	A203-A	A350-LF9
Alloy Steel	K12822	WP1	A335-P1	A204-B	A182-F1
	K11562	WP12	A335-P12	A387-12	A182-F12
	K11597	WP11	A335-P11	A387-11	A182-F11
	K21590	WP22	A335-P22	A387-22	A182-F22
	K41545	WP5	A335-P5	A387-5	A182-F5
	S50300	WP7	A335-P7	A387-7	A182-F7
	K90941	WP9	A335-P9	A387-9	A182-F9
	K90901	WP91	A335-P91	A387-F91	A182-F91
Stainless Steel	S30400	WP304	A312-TP304	A240-Type304	A182-F304
	S30409	WP304H	A312-TP304H	A240-Type304H	A182-F304H
	S30403	WP304L	A312-TP304L	A240-Type304L	A182-F304L
	S30908	WP309	A312-TP309	A240-Type309S	
	S31000	WP310	A312-TP310	A240-Type310S	A182-F310
	S31600	WP316	A312-TP316	A240-Type316	A182-F316
	S31609	WP316H	A312-TP316H	A240-Type316H	A182-F316H
	S31603	WP316L	A312-TP316L	A240-Type316L	A182-F316L
	S31703	WP317L	A312-TP317L	A240-Type317L	A182-F317L
	S32100	WP321	A312-TP321	A240-Type321	A182-F321
	S32109	WP321H	A312-TP321H	A240-Type321H	A182-F321H
	S34700	WP347	A312-TP347	A240-Type347	A182-F347
	S34709	WP347H	A312-TP347H	A240-Type347H	A182-F347H

COMPARISON OF ASTM SPECIFICATIONS AND SIMILAR STANDADARDS

KS Specification And Grade		JIS Specification And Grade		Steel Composition
Pipe	Plate	Pipe	Plate	
SPP	SB41	SGP(STPY 400)	SS400	Carbon Steel
SPPS38	SWS41B	STPG370	SM41B	Carbon Steel
SPPS42	SWS41B	STPG410	SM41B	Carbon Steel
SPHT38	SBB42	STPT370	SB42	Carbon Steel
SPHT42	SBB42	STPT410	SB42	Carbon Steel
SPHT49	SBB49	STPT480	SB49	Carbon Steel
STPL39	SLAL39	STPL380		Carbon and Low-Alloy Steel
		STPL450		3 1/2% Ni Steel
		STPL690		2% Ni-1% Cu Steel
SPA12	SBB49M	STPA12		Cabon Mo Steel
SPA22	SCMV2	STPA22		1% Cr-1/2% Mo Steel
SPA23	SCMV3	STPA23		1 1/4%Cr-1/2% Mo Steel
SPA24	SCMV4	STPA24	SCMV4	2 1/4% Cr-1% Mo Steel
SPA25	SCMV6	STPA25		5% Cr-1/2% Mo Steel
				7% Cr-1/2% Mo Steel
		STPA26		9% Cr-1% Mo Steel
				9% Cr-1% Mo-0.2% V+Cb+N
STS304TP	STS304	SUS304TP	SUS304	18% Cr-8% Mo Steel
		SUS304HTP		18% Cr-8% Ni-(0.04-0.10)% C Steel
STS304LTP	STS304L	SUS304LTP	SUS304L	18% Cr-8% Ni-0.035%C Steel
STS309STP	STS309S	SUS309STP	SUS309S	22% Cr-12% Ni Steel
STS310TP	STS310S	SUS310STP	SUS310S	25% Cr-20% Ni Steel
STS316TP	STS316	SUS316TP	SUS316	18% Cr-8% Ni-Mo Steel
STS316HTP		SUS316HTP		18% Cr-8% Ni-Mo-(0.04-0.10)%C Steel
STS316LTP	STS316L	SUS316LTP	SUS316L	18% Cr-8% Ni-Mo-0.035% C Steel
STS317LTP	STS317L	SUS317LTP	SUS317L	18% Cr-12% Ni-3.5% Mo-Low C
STS321TP	STS321	SUS321TP	SUS321	18% Cr-8% Ni-Ti Steel
		SUS321HTP		18% Cr-8% Ni-Ti-(0.04-0.10)% C Steel
STS347TP	STS347	SUS347TP	SUS347	18% Cr-8% Ni-Cb+Ta Steel
STS347HTP		SUS347HTP	A312-TP347H	18% Cr-8% Ni-Cb+Ta(0.04-0.10)% C Steel

Pressure Ratings

These fittings shall be designated as pressure class 2000, 3000 and 6000 fittings for threading and pressure class 3000, 6000, and 9000 for socket-welding. This designation identifies the fittings with their ratings as follow Table 1.

Table 1. : Correlation of Fittings Class With Schedule Number or Wall Designation of Pipe for Calculation of Ratings.

Pressure Class Designation of Fitting	Type of Fitting	Pipe Used for Rating Basic	
		Schedule No.	Wall Designation
2000	Threaded	80	XS
3000	Threaded	160	-
6000	Threaded	-	XXS
3000	Socket-Welding	80	XS
6000	Socket-Welding	160	-
9000	Socket-Welding	-	XXS

* This table is not intended to restrict the use of pipe of thinner or thicker wall with fittings Pipe actually used may be thinner or thicker in nominal wall than that shown in Table 1. When tinner pipe is used its strength may govern the rating. When thicker pipe is used(e.g., for mechanical strength) the strength of the fitting governs the rating.

Table 2. : Nominal wall thickness of Schedule 160 and Double Extra Strong Pipe.

NPS.	Schedule 160		XXS	
	inch	mm	inch	mm
1/8	0.124	3.15	0.190	4.83
1/4	0.145	3.68	0.238	6.05
3/8	0.158	4.01	0.252	6.40

Size Identification

The size of a fitting is identified by nominal pipe size.
For reducing fittings, the size of the largest run opening is to be given first, followed by the size of the opening opposite of the same run.
The branch size of a Tee is given last. Where the case is a Cross, The largest side-outlet is thirdly given, then the opening opposite.

TEE

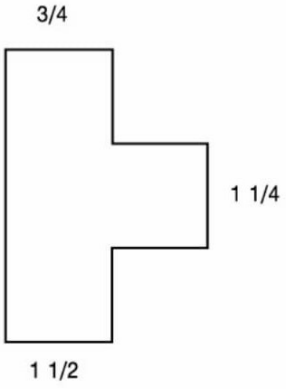

1 1/2 X 3/4 X 1 1/4

CROSS

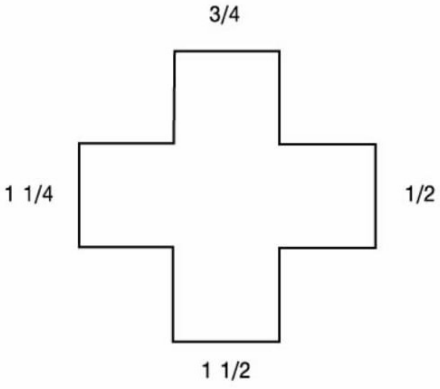

1 1/2 X 3/4 X 1 1/4 X 1/2

Threads

Unless otherwise specified in inquiry, all threaded fittings are supplied with NPT threads(ASME B1. 20. 1 American Standard Taper Pipe Thread) for reference, other available threads are:

- ISO/R7 Pipe Threads for Gas List Tubes and Screwed Fittings where Pressure-tight Joints are made on the threads (BS 21 & JIS B0203 PT Thread).
- API 5B, Line Pipe Threads.
- KS B0222 Taper Pipe Threads.

90° Elbow, 45° Elbow, Tee, Cross, Coupling

Class 3000, 6000, 9000

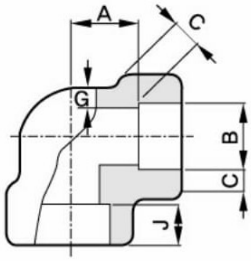

90°Elbow

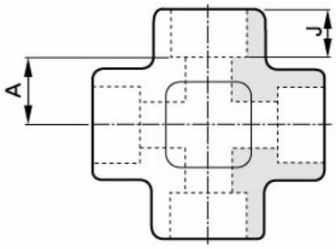

Cross

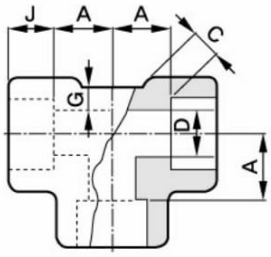

Tee

ASME B16.11

(in millimeters)

Nominal Pipe Size	Socket Bore Diameter, B	Bore Diameter of Fitting, D			Socket Wall Thickness, C						Body Wall, G		
					45 Elbows								
		Class Designation			Class Designation						Class Designation		
		3000	6000	9000	3000		6000		9000		3000	6000	9000
					Avg.	Min.	Avg.	Min.	Avg.	Min.	Min.	Min.	Min.
1/8	10.8 ~ 11.2	6.1 ~ 7.6	3.2 ~ 4.8		3.18	3.18	3.96	3.43			2.41	3.15	
1/4	14.2 ~ 14.6	8.5 ~ 10.0	5.6 ~ 7.1		3.78	3.30	4.60	4.01			3.02	3.68	
3/8	17.6 ~ 18.0	11.8 ~ 13.3	8.4 ~ 9.9		4.01	3.50	5.03	4.37			3.20	4.01	
1/2	21.8 ~ 22.2	15.0 ~ 16.6	11.0 ~ 12.5	5.6 ~ 7.2	4.67	4.09	5.97	5.18	9.35	8.18	3.73	4.78	7.47
3/4	27.2 ~ 27.6	20.2 ~ 21.7	14.8 ~ 16.3	10.3 ~ 11.8	4.90	4.27	6.96	6.04	9.78	8.56	3.91	5.56	7.82
1	33.9 ~ 34.3	25.9 ~ 27.4	19.9 ~ 21.5	14.4 ~ 16.0	5.69	4.98	7.92	6.93	11.38	9.96	4.55	6.35	9.09
1 1/4	42.7 ~ 43.1	34.3 ~ 35.8	28.7 ~ 30.2	22.0 ~ 23.5	6.07	5.28	7.92	6.93	12.14	10.62	4.85	6.35	9.70
1 1/2	48.8 ~ 49.2	40.1 ~ 41.6	33.2 ~ 34.7	27.2 ~ 28.7	6.35	5.54	8.92	7.80	12.70	11.12	5.08	7.14	10.15
2	61.2 ~ 61.7	51.7 ~ 53.3	42.1 ~ 43.6	37.4 ~ 38.9	6.93	6.04	10.92	9.50	13.84	12.12	5.54	8.74	11.07
2 1/2	73.9 ~ 74.4	61.2 ~ 64.2			8.76	7.67					7.01		
3	89.8 ~ 90.3	76.4 ~ 79.4			9.52	8.30					7.62		
4	115.2 ~ 115.7	100.7 ~ 103.8			10.69	9.35					8.56		

90° Elbow, 45° Elbow, Tee, Cross, Coupling

Class 3000, 6000, 9000

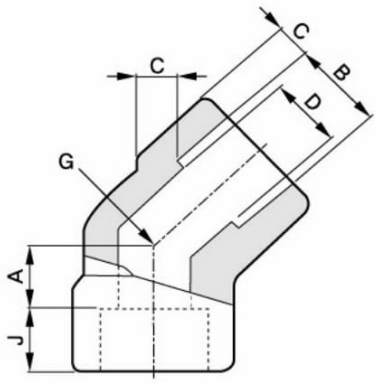

45° Elbow

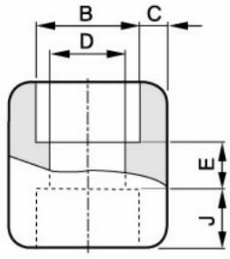

Coupling

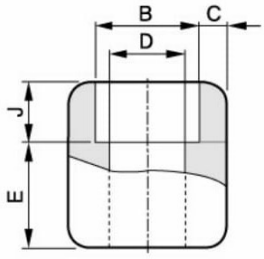

Half Coupling

ASME B16.11

(in millimeters)

Nominal Pipe Size	Min. Depth of Socket, J	Center to Bottom of Socket, A						Laying Lengths		Tolerances, ±		
		90° Elbows, Tees and Cross			45° Elbows			Couplings, E	Half Couplings, F	A	E	F
		Class Designation			Class Designation							
		3000	6000	9000	3000	6000	9000					
1/8	9.5	11.0	11.0		8.0	8.0		6.5	16.0	1.0	1.5	1.0
1/4	9.5	11.0	13.5		8.0	8.0		6.5	16.0	1.0	1.5	1.0
3/8	9.5	13.5	15.5		8.0	11.0		6.5	17.5	1.5	3.0	1.5
1/2	9.5	15.5	19.0	25.5	11.0	12.5	15.5	9.5	22.5	1.5	3.0	1.5
3/4	12.5	19.0	22.5	28.5	13.0	14.0	19.0	9.5	24.0	1.5	3.0	1.5
1	12.5	22.5	27.0	32.0	14.0	17.5	20.5	12.5	28.5	2.0	4.0	2.0
1 1/4	12.5	27.0	32.0	35.0	17.5	20.5	22.5	12.5	30.0	2.0	4.0	2.0
1 1/2	12.5	32.0	38.0	38.0	20.5	25.5	25.5	12.5	32.0	2.0	4.0	2.0
2	16.0	38.0	41.0	54.0	25.5	28.5	28.5	19.0	41.0	2.0	4.0	2.0
2 1/2	16.0	41.0			28.5			19.0	43.0	2.5	5.0	2.5
3	16.0	57.0			32.0			19.0	44.5	2.5	5.0	2.5
4	19.0	66.5			41.0			19.0	48.0	2.5	5.0	2.5

CAP

Class 3000, 6000, 9000

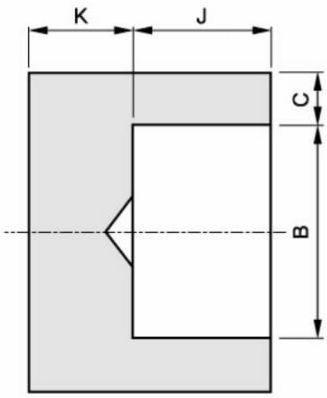

ASME B16.11

(in millimeters)

Nominal Pipe Size	Socket Bore Dia.B	Socket Wall Thickness C (Min)			Depth of Socket J (Min)	K (Min)		
		Class Designation				Class Designation		
		3000	6000	9000		3000	6000	9000
1/8	10.8 ~ 11.2	3.18	3.43		9.5	4.8	6.4	
1/4	14.2 ~ 14.6	3.30	4.01		9.5	4.8	6.4	
3/8	17.6 ~ 18.0	3.50	4.37		9.5	4.8	6.4	
1/2	21.8 ~ 22.2	4.09	5.18	8.18	9.5	6.4	7.9	11.2
3/4	27.2 ~ 27.6	4.27	6.04	8.56	12.5	6.4	7.9	12.7
1	33.9 ~ 34.3	4.98	6.93	9.96	12.5	9.6	11.2	14.2
1 1/4	42.7 ~ 43.1	5.28	6.93	10.62	12.5	9.6	11.2	14.2
1 1/2	48.8 ~ 49.2	5.54	7.80	11.12	12.5	11.2	12.7	15.7
2	61.2 ~ 61.7	6.04	9.50	12.12	16.0	12.7	15.7	19.0
2 1/2	73.9 ~ 74.4	7.67			16.0	15.7	19.0	
3	89.8 ~ 90.3	8.30			16.0	19.0	22.4	
4	115.2 ~ 115.7	9.35			19.0	22.4	28.4	

90° Elbow, 45° Elbow, Tee, Cross

Class 2000, 3000, 6000

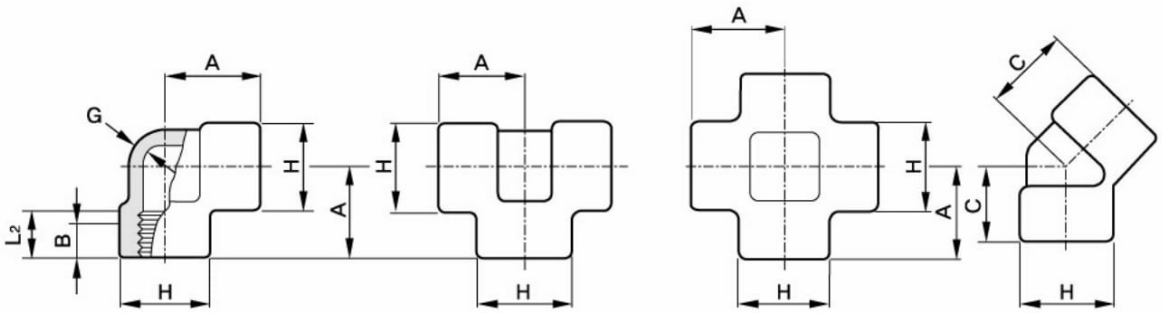

ASME B16.11

(in millimeters)

Nominal Pipe Size	Center to End Elbows, Tees, Crosses A			Center to End 45°Elbows C			Outside Diameter of Band H			Minimum Wall Thickness G			Length of Thread Min(1)	
	2000	3000	6000	2000	3000	6000	2000	3000	6000	2000	3000	6000	B	L_2
1/8	21	21	25	17	17	19	22	22	25	3.18	3.18	6.35	6.4	6.7
1/4	21	25	28	17	19	22	22	25	33	3.18	3.30	6.60	8.1	10.2
3/8	25	28	33	19	22	25	25	33	38	3.18	3.51	6.98	9.1	10.4
1/2	28	33	38	22	25	28	33	38	46	3.18	4.09	8.15	10.9	13.6
3/4	33	38	44	25	28	33	38	46	56	3.18	4.32	8.53	12.7	13.9
1	38	44	51	28	33	35	46	56	62	3.68	4.98	9.93	14.7	17.3
1 1/4	44	51	60	33	35	43	56	62	75	3.89	5.28	10.59	17.0	18.0
1 1/2	51	60	64	35	43	44	62	75	84	4.01	5.56	11.07	17.8	18.4
2	60	64	83	43	44	52	75	84	102	4.27	7.14	12.09	19.0	19.2
2 1/2	76	83	95	52	52	64	92	102	121	5.61	7.65	15.29	23.6	28.9
3	86	95	106	64	64	79	109	121	146	5.99	8.84	16.64	25.9	30.5
4	106	114	114	79	79	79	146	152	152	6.55	11.18	18.67	27.7	33.0

(1) Dimension B is minimum length of perfect thread. The length of useful thread(B plus threads with fully formed roots and flat crests) shall not be less than L_2 (effective length of external thread) required by American National Standard for Pipe Threads (ASME B1.20.1)

Coupling, Half Coupling, Cap

Class 3000, 6000

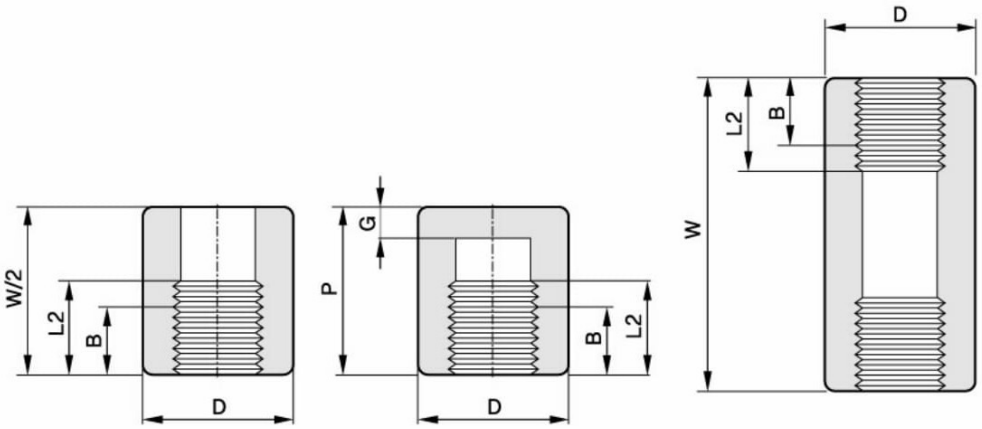

ASME B16.11

(in millimeters)

Nominal Pipe Size	End-to-End Couplings W	End-to-End Caps P		Outside Diameter D		End Wall Thickness Min G		Length of Thread Min (1)	
	3000 and 6000	3000	6000	3000	6000	3000	6000	B	L_2
1/8	32	19		16	22	4.8		6.4	6.7
1/4	35	25	27	19	25	4.8	6.4	8.1	10.2
3/8	38	25	27	22	32	4.8	6.4	9.1	10.4
1/2	48	32	33	28	38	6.4	7.9	10.9	13.6
3/4	51	37	38	35	44	6.4	7.9	12.7	13.9
1	60	41	43	44	57	9.7	11.2	14.7	17.3
1 1/4	67	44	46	57	64	9.7	11.2	17.0	18.0
1 1/2	79	44	48	64	76	11.2	12.7	17.8	18.4
2	86	48	51	76	92	12.7	15.7	19.0	19.2
2 1/2	92	60	64	92	108	15.7	19.0	23.6	28.9
3	108	65	68	108	127	19.0	22.4	25.9	30.5
4	121	68	75	140	159	22.4	28.4	27.7	33.0

(1) Dimension B is minimum length of perfect thread. The length of useful thread(B plus threads with fully formed roots and flat crests) shall not be less than L_2 (effective length of external thread) required by American National Standard for Pipe Threads (ASME B1.20.1)

∗Class 2000 and NPT 1/8 class 6000 couplings, half couplings, and caps are not included in this standard.

Plug, Bushing

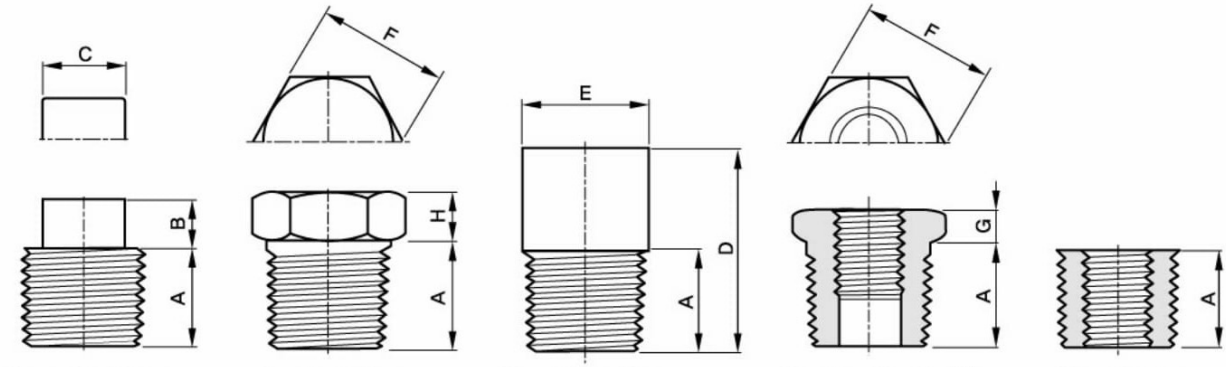

Square Head Plug | Hex Head Plug | Round Head Plug | Hex Head Bushing(1) | Flush Bushing

ASME B16.11

(in millimeters)

Nominal Pipe Size	Length (Min) A	Plugs Square Head		Plugs Round Head		Hex Plugs & Bushing		
		Height of Squard (Min) B	Width Flats (Min) C	Nominal Diameter of Head E	Length (Min) D	Width Flats (Nom) F	Hex Height (Min) Bushing G	Hex Height (Min) Plug H
1/8	10	6	7	10	35	11		6
1/4	11	6	10	14	41	16	3	6
3/8	13	8	11	18	41	18	4	8
1/2	14	10	14	21	44	22	5	8
3/4	16	11	16	27	44	27	6	10
1	19	13	21	33	51	36	6	10
1 1/4	21	14	24	43	51	46	7	14
1 1/2	21	16	28	48	51	50	8	16
2	22	18	32	60	64	65	9	18
2 1/2	27	19	36	73	70	75	10	19
3	28	21	41	89	70	90	10	21
4	32	25	65	114	76	115	13	25

(1) Cautionary Note Regarding Hex Bushings, Hex Head Bushings of one-size reduction should not be used in services wherein they might be subject to harmful loads and forces other than internal pressures.

Reducer insert

Class 3000, 6000

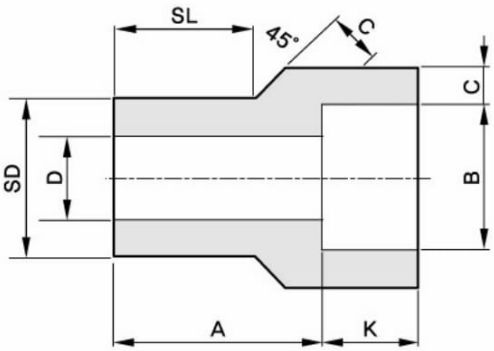

Type.1

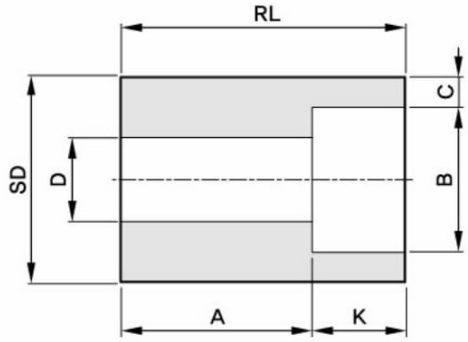

Type. 2[1]

MSS SP-79

(in millimeters)

Nominal Pipe Size	Type		Socket		Shank Dia SD	Laying Lenght A		Bore D		Wall Min C		Length Min			
			Dia B	Depth Min K								SL		RL	
	3M	6M				3M	6M	3M	6M	3M	6M	3M	6M	3M	6M
3/8 X 1/4	1	1	14.35	10	17.15	19	21	9.0	6.5	3.78	4.60	14	16		
1/2 X 3/8	1	1	17.78	10	21.34	21	23	12.5	9.0	4.01	5.03	16	16		
X 1/4	2	1	14.35	10	21.34	21	21	9.0	6.5	3.78	4.60	16	16		
3/4 X 1/2	1	1	21.97	10	26.67	22	25	16.0	11.5	4.67	5.97	17	19		
X 3/8	2	1	17.78	10	26.67	16	22	12.5	9.0	4.01	5.03		19	27	
X 1/4	2	2	14.35	10	26.67	18	22	9.0	6.5	3.78	4.60			27	32
1 X 3/4	1	1	27.31	13	33.40	24	28	21.0	15.5	4.90	6.96	19	21		
X 1/2	2	1	21.97	10	33.40	16	28	16.0	11.5	4.67	5.97		21	28	
X 3/8	2	2	17.78	10	33.40	18	22	12.5	9.0	4.01	5.03			28	33
X 1/4	2	2	14.35	10	33.40	19	24	9.0	6.5	3.78	4.60			28	33
1-1/4 X 1	1	1	34.04	13	42.16	25	30	26.5	20.5	5.69	7.92	21	22		
X 3/4	2	2	27.31	13	42.16	18	21	21.0	15.5	4.90	6.96			32	35
X 1/2	2	2	21.97	10	42.16	19	22	16.0	11.5	4.67	5.97			32	35
X 3/8	2	2	17.78	10	42.16	21	24	12.5	9.0	4.01	5.03			32	35
X 1/4	2	2	14.35	10	42.16	22	25	9.0	6.5	3.78	4.60			32	35
1-1/2 X 1-1/4	1	1	42.80	13	48.26	28	35	35.0	29.5	6.07	7.92	22	25		
X 1	2	1	34.04	13	48.26	18	29	26.5	20.5	5.69	7.92		25	33	
X 3/4	2	2	27.31	13	48.26	19	25	21.0	15.5	4.90	6.96			33	40
X 1/2	2	2	21.97	10	48.26	21	27	16.0	11.5	4.67	5.97			33	40
X 3/8	2	2	17.78	10	48.26	22	28	12.5	9.0	4.01	5.03			33	40

1) At the option of the manufacturer Type 2 Reducers may be furnished in Type 1 configuration.

Reducer insert

Class 3000, 6000

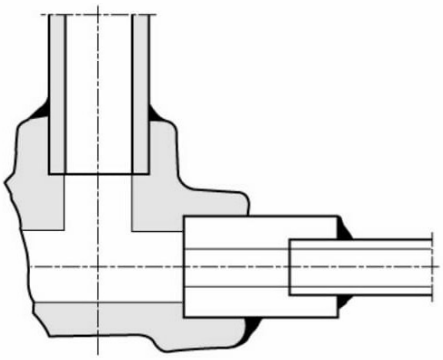

Application of Reducer insert

MSS SP-79

(in millimeters)

Nominal Pipe Size	Type		Socket		Shank Dia SD	Laying Lenght A		Bore D		Wall Min C		Length Min			
			Dia B	Depth Min K								SL		RL	
	3M	6M				3M	6M	3M	6M	3M	6M	3M	6M	3M	6M
2 X 1-1/2	1	1	48,90	13	60,32	32	39	41,0	34,0	6,35	8,90	25	28		
X 1-1/4	2	2	42,80	13	60,32	21	24	35,0	29,5	6,07	7,92			38	41
X 1	2	2	34,04	13	60,32	22	25	26,5	21,0	5,69	7,92			38	41
X 3/4	2	2	27,31	13	60,32	24	27	21,0	15,5	4,90	6,96			38	41
X 1/2	2	2	21,97	10	60,32	25	28	16,0	11,5	4,67	5,97			38	41
2-1/2 X 2	1	1	61,37	16	73,02	46	43	52,5	43,0	6,93	10,92	38	32		
X 1-1/2	2	2	48,90	13	73,02	35		41,0		6,35				54	
X 1-1/4	2	2	42,80	13	73,02	37		35,0		6,07				54	
X 1	2	2	34,04	13	73,02	38		26,5		5,69				54	
X 3/4	2	2	27,31	13	73,02	40		21,0		4,90				54	
3 X 2-1/2	1		74,07	16	88,90	38		62,5		8,76		32			
X 2	2		61,37	16	88,90	25		52,5		6,93				48	
X 1-1/2	2		48,90	13	88,90	29		41,0		6,35				48	
X 1-1/4	2		42,80	13	88,90	30		35,0		6,07				48	
X 1	2		34,04	13	88,90	32		26,5		5,69				48	
4 X 3	2		90,04	16	114,30	33		78,0		9,50				60	
X 2-1/2	2		74,07	16	114,30	38		62,5		8,76				60	
X 2	2		61,37	16	114,30	38		52,5		6,93				60	
X 1-1/2	2		48,90	13	114,30	42		41,0		6,35				60	
X 1-1/4	2		42,80	13	114,30	43		35,0		6,07				60	

TOLERANCES

Laying Length A - Sizes 3/8" thru 3/4" + 1,5mm / - 0,0mm
Sizes 1" thru 2" + 2,0mm / - 0,0mm
Sizes 2-1/2" thru 4" + 2,5mm / - 0,0mm

Socket Dia. B - Sizes 1/4" thru 2" ± 0,25mm
Sizes 2-1/2" thru 3" + 0,40mm / - 0,25mm

Bore D - Sizes 1/4" thru 2" ± 0,8mm
Sizes 2-1/2" thru 3" ± 1,5mm

Shank Dia. SD - Sizes 3/8" thru 1-1/2" ± 0,25mm
Sizes 2" thru 3" ± 0,50mm
Sizes 4" ± 0,75mm

Shank Length SL - Sizes 3/8" thru 3/4" + 0,00mm / - 1,50mm

Concentric Reducer / Eccentric Reducer

Class 3000, 6000, 9000

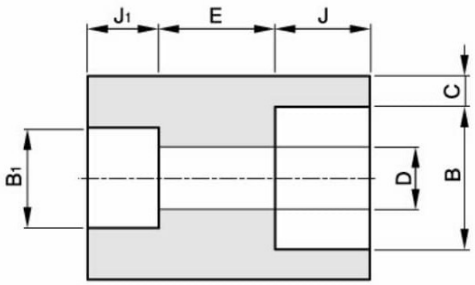

Concentric Reducer

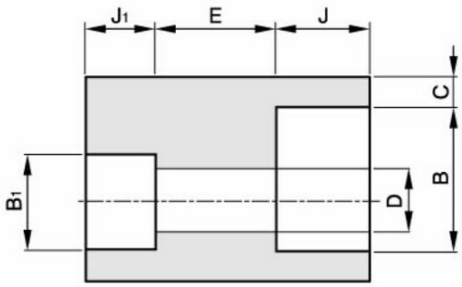

Eccentric Reducer

(in millimeters)

Nominal Pipe Size	Socket Bore Dia (Min) (1)		Bore Diameter of Fitting - D (1)			Socket Wall Thickness (Min) - C			Depth Min		Laying Lengths (Min) E (2)
	B	B_1	3000	6000	9000	3000	6000	9000	J	J_1	
1/4 X 1/8	14.2	10.8	6.8	4.0		3.30	4.01		9.5	9.5	6.5
3/8 X 1/4	17.6	14.2	9.0	6.5		3.50	4.37		9.5	9.5	6.5
1/2 X 1/4	21.8	14.2	9.0	6.5		4.09	5.18	8.18	9.5	9.5	9.5
X 3/8		17.6	12.5	9.0		4.09	5.18	8.18	9.5	9.5	9.5
3/4 X 1/4	27.2	14.2	9.0	6.5		4.27	6.04	8.56	12.5	9.5	9.5
X 3/8		17.6	12.5	9.0		4.27	6.04	8.56	12.5	9.5	9.5
X 1/2		21.8	16.0	11.5	6.4	4.27	6.04	8.56	12.5	9.5	9.5
1 X 3/8	33.9	17.6	12.5	9.0		4.98	6.93	9.96	12.5	9.5	12.5
X 1/2		21.8	16.0	11.5	6.4	4.98	6.93	9.96	12.5	9.5	12.5
X 3/4		27.2	21.0	15.5	11.0	4.98	6.93	9.96	12.5	12.5	12.5
1-1/4 X 1/2	42.7	21.8	16.0	11.5	6.4	5.28	6.93	10.62	12.5	9.5	12.5
X 3/4		27.2	21.0	15.5	11.0	5.28	6.93	10.62	12.5	12.5	12.5
X 1		33.9	26.5	20.5	15.2	5.28	6.93	10.62	12.5	12.5	12.5
1-1/2 X 3/4	48.8	27.2	21.0	15.5	11.0	5.54	7.80	11.12	12.5	12.5	12.5
X 1		33.9	26.5	20.5	15.2	5.54	7.80	11.12	12.5	12.5	12.5
X 1-1/4		42.7	35.0	29.5	22.7	5.54	7.80	11.12	12.5	12.5	12.5
2 X 1	61.2	33.9	26.5	20.5	15.2	6.04	9.50	12.12	16.0	12.5	19.0
X 1-1/4		42.7	35.0	29.5	22.7	6.04	9.50	12.12	16.0	12.5	19.0
X 1-1/2		48.8	41.0	34.0	27.9	6.04	9.50	12.12	16.0	12.5	19.0
2-1/2 X 1-1/4	73.9	42.7	35.0	29.5	22.7	7.67			16.0	12.5	19.0
X 1-1/2		48.8	41.0	34.0	27.9	7.67			16.0	12.5	19.0
X 2		61.2	52.5	43.0	38.1	7.67			16.0	16.0	19.0
3 X 1-1/2	89.9	48.8	41.0	34.0	27.9	8.30			16.0	12.5	19.0
X 2		61.2	52.5	43.0	38.1	8.30			16.0	16.0	19.0
X 2-1/2		73.9	62.5	54.1		8.30			16.0	16.0	19.0
4 X 2	115.2	61.2	52.5	43.0		9.35			19.0	16.0	19.0
X 2-1/2		73.9	62.5	54.1		9.35			19.0	16.0	19.0
X 3		89.8	78.0	66.8		9.35			19.0	16.0	19.0

Concentric Reducer / Eccentric Reducer

Class 3000, 6000

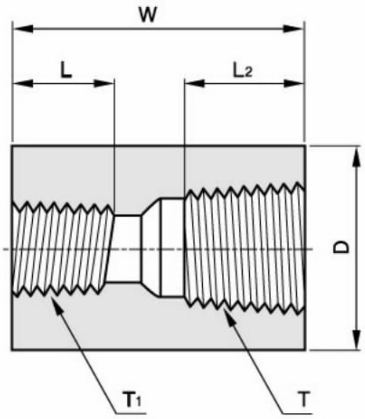

Concentric Reducer

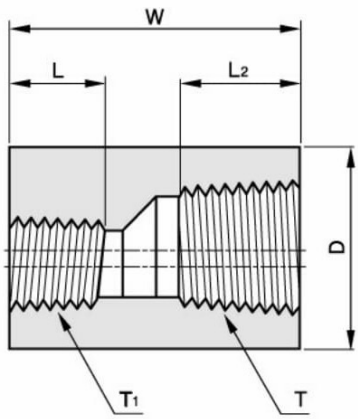

Eccentric Reducer

(in millimeters)

Nominal Pipe Size	Outside Diameter - D		End to End W	Length of Thread(Min)	
	3000	6000		L_2	L
1/4 X 1/8	19	25	35	8.1	6.4
3/8 X 1/4	22	32	38	9.1	8.1
1/2 X 1/4	28	38	48	10.9	8.1
X 3/8	28	38	48	10.9	9.1
3/4 X 3/8	35	44	51	12.7	8.1
X 3/8	35	44	51	12.7	9.1
X 1/2	35	44	51	12.7	10.9
1 X 3/8	44	57	60	14.7	9.1
X 1/2	44	57	60	14.7	10.9
X 3/4	44	57	60	14.7	12.7
1-1/4 X 1/2	57	64	67	17.0	10.9
X 3/4	57	64	67	17.0	12.7
X 1	57	64	67	17.0	14.7
1-1/2 X 3/4	64	76	79	17.8	12.7

Nominal Pipe Size	Outside Diameter - D		End to End W	Length of Thread(Min)	
	3000	6000		L_2	L
1-1/2 X 1	64	76	79	17.8	14.7
X 1-1/4	64	76	79	17.8	17.0
2 X 1	76	92	86	19.0	14.7
X 1-1/4	76	92	86	19.0	17.0
X 1-1/2	76	92	86	19.0	17.8
2-1/2 X 1-1/4	92	108	92	23.6	17.0
X 1-1/2	92	108	92	23.6	17.8
X 2	92	108	92	23.6	19.0
3 X 1-1/2	108	127	108	25.9	17.8
X 2	108	127	108	25.9	19.0
X 2-1/2	108	127	108	25.9	23.6
4 X 2	140	159	121	27.7	19.0
X 2-1/2	140	159	121	27.7	23.6
4 X 3	140	159	121	27.7	25.9

NOTE : (1) Tolerance is according to coupling at ASME B16.11

Boss

Class 3000, 6000, 9000

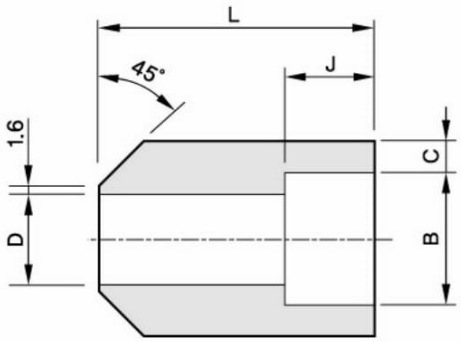

Type 1

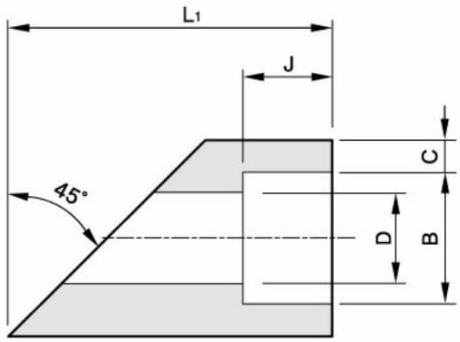

Type 2

ASME B16.11

(in millimeters)

Nominal Pipe Size	Socket Bore Dia (Min) B	Bore Diameter of Fitting-D			Socket Wall Thickness Min - C			Depth Min J	End to End	
		3000	6000	9000	3000	6000	9000		L_1	L (2)
1/4	14.2 ~ 14.6	8.5 ~ 10.0	5.6 ~ 7.1		3.30	4.01		9.5	25.5	62
3/8	17.6 ~ 18.0	11.8 ~ 13.3	8.4 ~ 9.9		3.50	4.37		9.5	27	66
1/2	21.8 ~ 22.2	15.0 ~ 16.6	11.0 ~ 12.5	5.6 ~ 7.2	4.09	5.18	8.18	9.5	32	82
3/4	27.2 ~ 27.6	20.2 ~ 21.7	14.8 ~ 16.3	10.3 ~ 11.8	4.27	6.04	8.56	12.5	36.5	88
1	33.9 ~ 34.3	25.9 ~ 27.4	19.9 ~ 21.5	14.4 ~ 16.0	4.98	6.93	9.96	12.5	41	96
1-1/4	42.7 ~ 43.1	34.3 ~ 35.8	28.7 ~ 30.2	22.0 ~ 23.5	5.28	6.93	10.62	12.5	42.5	105
1-1/2	48.8 ~ 49.2	40.1 ~ 41.6	33.2 ~ 34.7	27.2 ~ 28.7	5.54	7.80	11.12	12.5	44.5	112
2	61.2 ~ 61.7	51.7 ~ 53.3	42.1 ~ 43.6	37.4 ~ 38.9	6.04	9.50	12.12	16.0	57	125

NOTE : (1) Weld Connection 45 ° Bevel operation
(2) DongLim Standard

Boss

Class 3000, 6000, 9000

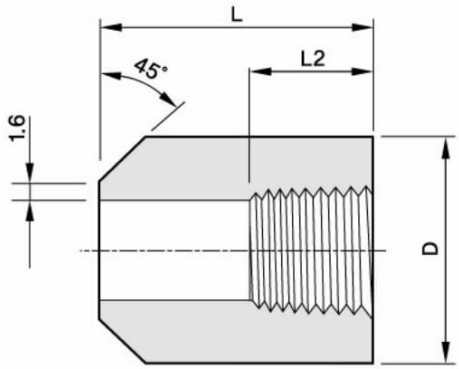

Type 1

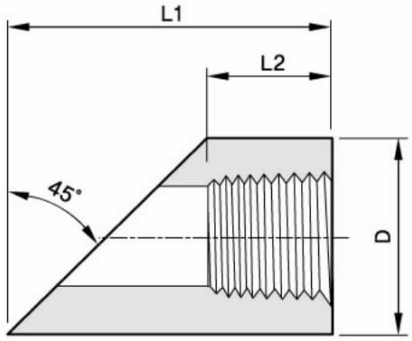

Type 2

ASME B16.11

(in millimeters)

Nominal Pipe Size	Outside Diameter - D		End to End		Length of Thread L_2 Min (2)
A	3000	6000	L	L_1	
1/4	19	28	17.5	62	8.1
3/8	22	32	19	66	9.1
1/2	28	38	24	82	10.9
3/4	35	44	25.5	88	12.7
1	44	54	30	96	14.7
1-1/4	57	64	33.5	105	17.0
1-1/2	64	76	39.5	112	17.8
2	76	92	43	125	19.0

NOTE : (1) Weld Connection 45 ° Bevel operation
(2) DongLim Standard

Union

Class 3000

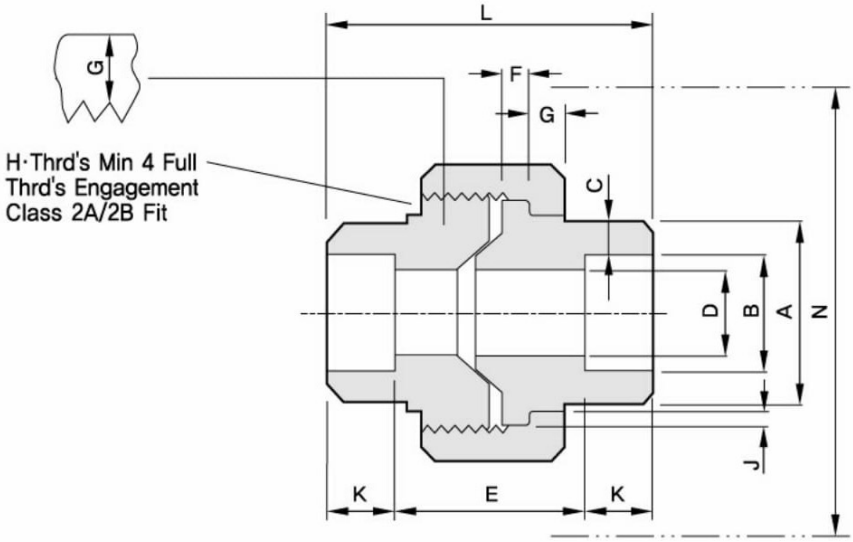

MSS SP - 83

(in millimeters)

Nominal Pipe Size	Pipe End Min	Socket Bore Dia	Socket Wall Min	Water Way Bore	Laying Length	Male Flange Min	Nut Min	Threads Par 25.4mm Max	Bearing Min	Depth of Socket Min	Length Assem. Nom	Clear Assem. Nut
	A	B	C	D	E	F	G	H	J	K	L	N
1/8	21.8	10.67 ~ 10.92	3.17	6.43 ~ 6.68	19.0 ~ 22.4	3.17	3.17	16	1.24	9.6	41.4	49.0
1/4	21.8	13.97 ~ 14.22	3.30	9.45 ~ 9.85	19.0 ~ 22.4	3.17	3.17	16	1.24	9.6	41.4	49.0
3/8	25.9	17.53 ~ 17.78	3.48	13.51 ~ 13.92	20.6 ~ 26.9	3.43	3.43	14	1.37	9.6	46.0	55.0
1/2	31.2	21.59 ~ 21.84	4.06	17.07 ~ 17.47	20.6 ~ 26.9	3.68	3.68	14	1.50	9.6	49.0	57.0
3/4	37.1	26.92 ~ 27.18	4.27	21.39 ~ 21.79	25.4 ~ 31.8	4.06	4.06	11	1.68	12.7	56.9	67.0
1	45.5	33.78 ~ 34.04	4.95	27.74 ~ 28.14	26.2 ~ 34.3	4.57	4.44	11	1.85	12.7	62.0	79.0
1-1/4	54.9	42.42 ~ 42.67	5.28	35.36 ~ 35.76	32.5 ~ 40.6	5.33	5.21	11	2.13	12.7	71.1	94.0
1-1/2	61.5	48.51 ~ 48.77	5.54	41.20 ~ 41.61	34.0 ~ 42.2	5.84	5.59	10	2.31	12.7	76.5	111.0
2	75.2	61.21 ~ 61.47	6.05	52.12 ~ 52.53	37.3 ~ 45.5	6.60	6.35	10	2.69	15.8	86.1	132.0
2-1/2	91.7	73.66 ~ 74.17	7.65	64.31 ~ 64.72	52.1 ~ 61.7	7.49	7.11	8	3.07	15.8	102.4	148.0
3	109.2	89.66 ~ 90.17	8.31	77.27 ~ 77.67	53.6 ~ 63.8	8.25	8.00	8	3.53	15.8	109.0	175.0

Union

Class 3000

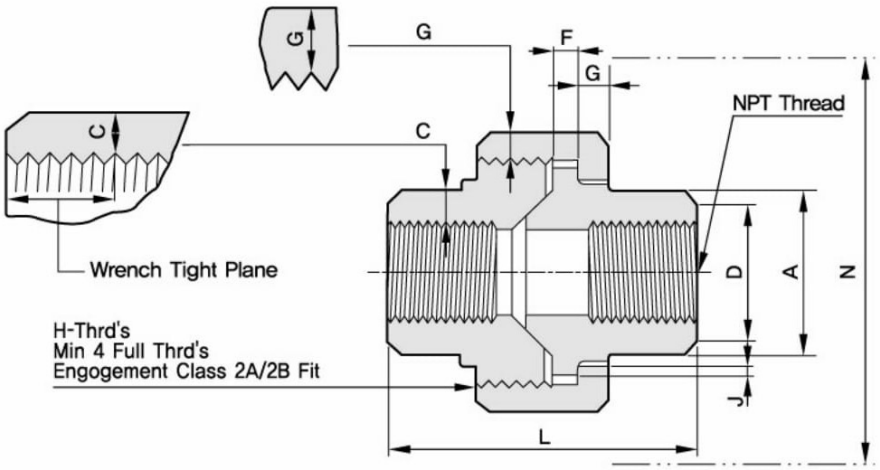

MSS SP - 83

(in millimeters)

Nominal Pipe Size	Pipe End Min	Wall Min	Water Way Bore	Male Flange Min	Nut Min	Threads Per 25.4mm Max	Bearing Min	Length Assem. Nominal	Clear Assem. Nut
	A	C	D	F	G	H	J	L	N
1/8	14.7	2.41	6.43 ~ 6.83	3.17	3.2	16	1.24	41.4	49.0
1/4	19.0	3.02	9.45 ~ 9.85	3.17	3.2	16	1.24	41.4	49.0
3/8	22.9	3.20	13.51 ~ 13.92	3.43	3.4	14	1.37	46.0	55.0
1/2	27.7	3.73	17.07 ~ 17.47	3.68	3.7	14	1.50	49.0	57.0
3/4	33.5	3.91	21.39 ~ 21.79	4.06	4.1	11	1.68	56.9	67.0
1	41.4	4.55	27.74 ~ 28.14	4.57	4.4	11	1.85	62.0	79.0
1-1/4	50.5	4.85	35.36 ~ 35.76	5.33	5.2	11	2.13	71.1	94.0
1-1/2	57.2	5.08	41.20 ~ 41.61	5.84	5.6	10	2.31	76.4	111.0
2	70.1	5.54	52.12 ~ 52.53	6.60	6.4	10	2.69	86.1	132.0
2-1/2	85.3	7.01	64.31 ~ 64.72	7.49	7.1	8	3.07	102.4	148.0
3	102.4	7.62	77.27 ~ 77.67	8.25	8.0	8	3.53	109.0	175.0

Nipple

Class 3000, 6000

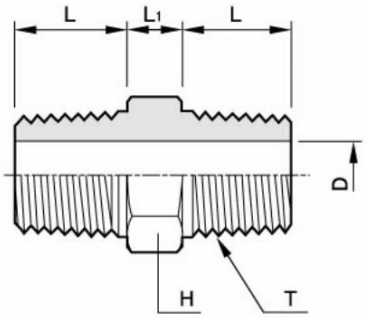

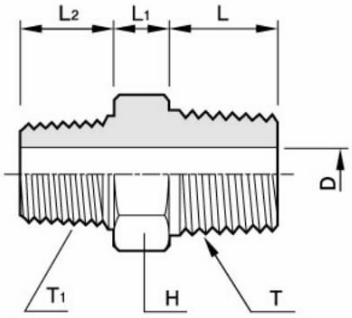

Reducing Nipple

(in millimeters)

Nominal Size T	D	H*	L	L_1
1/8	4	12	10	6
1/4	7	17	14	8
3/8	9	19	15	8
1/2	12	22	19	9
3/4	16	27	21	10
1	20	35	24	11
1-1/4	28	46	27	12
1-1/2	32	50	27	14
2	40	65	31	16
2-1/2	55	80	36	18
3	65	95	39	20

H: Size 2" and smaller are Hexagonal Bodies, size over 2 1/2" is Octagonal body*

Nominal Size T	D	H*	L	L_1	L_2
3/8 X 1/4	7	19	15	8	14
1/2 X 1/4	7	22	19	9	14
1/2 X 3/8	9	22	19	9	15
3/4 X 1/4	7	27	21	10	14
3/4 X 3/8	9	27	21	10	15
3/4 X 1/2	12	27	21	10	19
1 X 3/8	9	35	24	11	15
1 X 1/2	12	35	24	11	19
1 X 3/4	16	35	24	11	21
1-1/4 X 1/2	12	46	27	12	19
1-1/4 X 3/4	16	46	27	12	21
1-1/4 X 1	20	46	27	12	24
1-1/2 X 3/4	16	50	27	14	21
1-1/2 X 1	20	50	27	14	24
1-1/2 X 1-1/4	28	50	27	14	27
2 X 1	20	65	31	16	24
2 X 1-1/4	28	65	31	16	27
2 X 1-1/2	32	65	31	16	27
2-1/2 X 1-1/4	28	80	36	18	27
2-1/2 X 1-1/2	32	80	36	18	27
2-1/2 X 2	40	80	36	18	31
3 X 1-1/2	32	95	39	20	27
3 X 2	40	95	39	20	31
3 X 2-1/2	55	95	39	20	36

Branch Outlet Nipple
XS, XXS

MSS SP - 95

Run Pipe Size	Outlet Size		A (mm)	D(mm)		G(mm)	
	T (Thread)	M (mm)		XS	XXS	XS	XXS
36 ~ 3/4	1/2	21	88.9	13.84	6.36	23.80	14.28
36 ~ 1	3/4	27	88.9	18.88	11.06	30.16	19.05
36 ~ 1-1/4	1	33	88.9	24.30	15.22	36.51	25.40
36 ~ 1-1/2	1-1/4	42	88.9	32.50	22.80	44.45	33.33
36 ~ 2	1-1/2	48	88.9	38.14	28.00	50.80	38.10
36 ~ 2-1/2	2	60	88.9	49.22	38.16	60.08	42.86

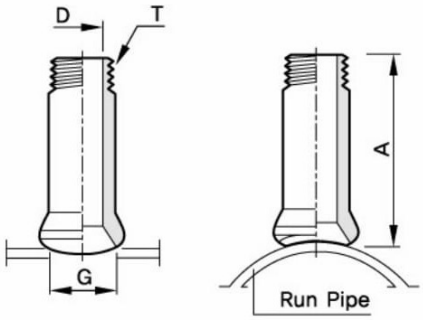

Threaded

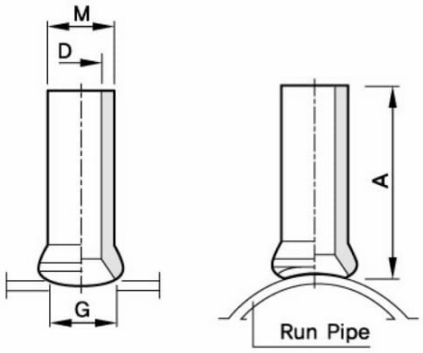

Plain End

Swaged Nipple

MSS SP - 95

Large end Size	Small end Size	Length (mm)
1/4	1/8 ~	57 ± 2
3/8	1/4 ~ 1/8	64 ± 2
1/2	3/8 ~ 1/8	70 ± 2
3/4	1/2 ~ 1/8	76 ± 2
1	3/4 ~ 1/8	89 ± 2
1-1/4	1 ~ 1/8	102 ± 2
1-1/2	1-1/4 ~ 1/8	114 ± 2
2	1-1/2 ~ 1/8	165 ± 2
2-1/2	2 ~ 1/8	178 ± 2
3	2-1/2 ~ 1/8	203 ± 2
3-1/2	3 ~ 1/8	203 ± 2
4	3-1/2 ~ 1/8	229 ± 2

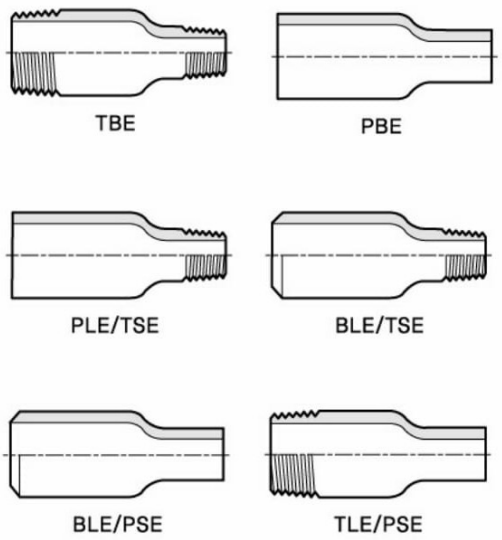

TBE : Threaded Both End
PBE : Plain Both End
PLE / TSE : Plain Large End - Threaded Small End
BLE / TSE : Beveled Large End - Threaded Small End
TLE / PSE : Threaded Large End - Plain Small End
BLE / PSE : Beveled Large End - Plain Small End

** Pipe Schedule Numbers and Weight Designation is according to ASME B36. 10 & B36.19*

Branch Outlet Butt Weld

STD(Sch 40). XS(Sch 80), Sch 160, XXS

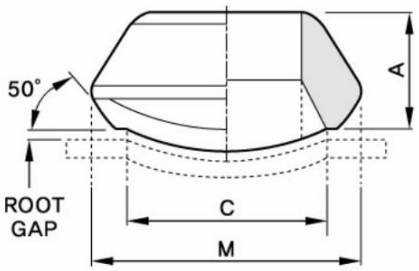

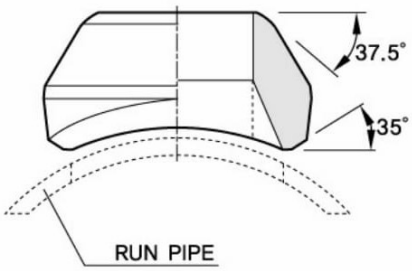

MSS SP-97

(in millimeters)

Out Let Size	A			M			C		
	STD	XS	Sch 160-XXS	STD	XS	Sch 160-XXS	STD	XS	Sch 160-XXS
1/2	19.1	19.1	28.6	34.9	34.9	34.9	23.8	23.8	14.3
3/4	22.2	22.2	31.8	44.5	44.5	44.5	30.2	30.2	19.1
1	27.0	27.0	38.1	54.0	54.0	50.8	36.5	36.5	25.4
1-1/4	31.8	31.8	44.5	65.1	65.1	61.9	44.5	44.5	33.3
1-1/2	33.3	33.3	50.8	73.0	73.0	69.9	50.8	50.8	38.1
2	38.1	38.1	55.6	88.9	88.9	81.0	65.1	65.1	42.9
2-1/2	41.3	41.3	61.9	103.2	103.2	96.8	76.2	76.2	54.0
3	44.5	44.5	73.0	122.2	122.2	120.7	93.7	93.7	73.0
4	50.8	50.8	84.1	152.4	152.4	152.4	120.7	120.7	98.4
5	57.2	57.2	93.7	179.4	179.4	187.3	141.3	141.3	122.2
6	60.3	77.8	104.8	215.9	225.4	220.7	169.9	169.9	146.1
8	69.9	98.4	111.1	263.5	292.1	284.2	220.7	220.7	173.0
10	77.8	93.7	125.4	322.3	323.9	312.7	274.6	265.1	215.9
12	85.7	103.2		377.8	379.4		325.4	317.5	
14	88.9	100.0		409.6	431.8		357.2	350.8	
16	93.7	106.4		463.6	466.7		408.0	403.2	
18	96.8	111.1		520.7	517.5		458.8	455.6	
20	101.6	119.1		571.5	582.6		508.0	509.6	
24	115.9	139.7		689.0	708.0		614.4	614.4	
26	119.1	146.1		738.2	765.2		666.8	692.2	

* *Applicable Run Pipe Size are from Out-let Size to 36"*
* *Standard Weight Fittings are the Same as Schedule 40 Fittings Until 10" and Extra Strong Fittings are the Same as Schedule 80 Until 8"*
* *Pipe Schedule Numbers and Weight Designations are in Accordance with ASME B36.10 & B 36.19*
* *When Ordering Branch Outlet Butt Weld, Include the Quantity, Size(Run and Outlet), Description(Weldolet, Schedule Number) and Material.*

Branch Outlet Socket Weld

Class 3000, 6000

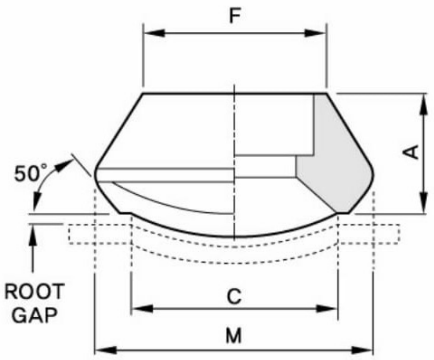

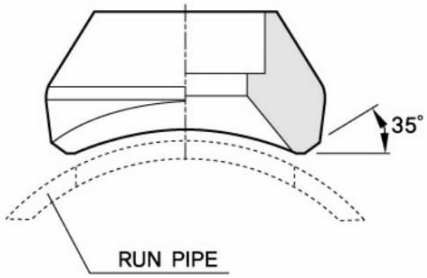

MSS SP-97

(in millimeters)

Out Let Size	A		B		C		F	
	3000	6000	3000	6000	3000	6000	3000	6000
1/2	25.4	31.8	35.7	43.7	23.0	19.1	31.8	39.7
3/4	27.0	36.5	43.7	49.6	29.4	25.4	36.5	45.2
1	33.3	39.7	50.8	61.9	36.5	33.3	46.0	57.2
1-1/4	33.3	41.3	65.1	69.1	44.5	38.1	55.6	65.1
1-1/2	34.9	42.9	72.2	82.6	50.8	49.2	61.9	76.2
2	38.1	52.4	88.1	102.4	65.1	69.9	74.6	92.1
2-1/2	39.7		103.2		76.2		87.3	
3	44.5		122.2		93.7		104.8	
4	47.6		151.6		120.7		130.2	

* *Applicable Run Pipe Size are from Out-let Size to 36"*
* *For the 3000# and 6000# Sockolet, Inside Bore, Socket Depth Dimensions are According to ASME B16.11*
* *Pipe Schedule Numbers and Weight Designations are in Accordance with ASME B36.10 & B 36.19*
* *When Ordering Sockolets and Thredolets, Include the Quantity, Run and Outlet Size Item and Rating(or Schedule Number) and Material*
* *If Required 9000# by purchaser, Dimensions Will be According to 6000#*

Branch Outlet Threads

Class 3000, 6000

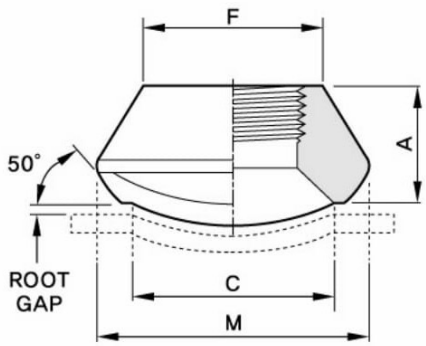

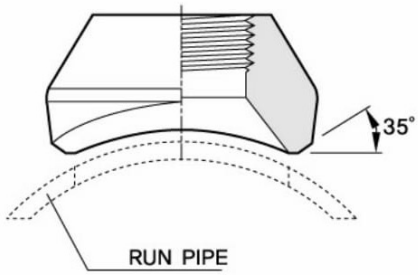

MSS SP-97

(in millimeters)

Out Let Size	A		M		C		F	
	3000	6000	3000	6000	3000	6000	3000	6000
1/2	25.4	31.8	35.7	43.7	23.8	19.1	31.8	39.7
3/4	27.0	36.5	43.7	49.6	29.4	25.4	36.5	45.2
1	33.3	39.7	50.8	61.9	36.5	33.3	46.0	57.2
1-1/4	33.3	41.3	65.1	69.1	44.5	38.1	55.6	65.1
1-1/2	34.9	42.9	72.2	82.6	50.8	49.2	61.9	76.2
2	38.1	52.4	88.1	102.4	65.1	69.9	74.6	92.1
2-1/2	46.0		103.2		76.2		87.3	
3	50.8		122.2		93.7		104.8	
4	57.2		151.6		120.7		130.2	

* *Applicable Run Pipe Size are from Out-let Size to 36"*
* *For the 3000# and 6000# Sockolet, Inside Bore, Socket Depth Dimensions are According to ASME B16.11*
* *Pipe Schedule Numbers and Weight Designations are in Accordance with ASME B36.10 & B 36.19*
* *When Ordering Sockolets and Thredolets, Include the Quantity, Run and Outlet Size Item and Rating(or Schedule Number) and Material*
* *If Required 9000# by purchaser, Dimensions Will be According to 6000#*

Branch Outlet Flange

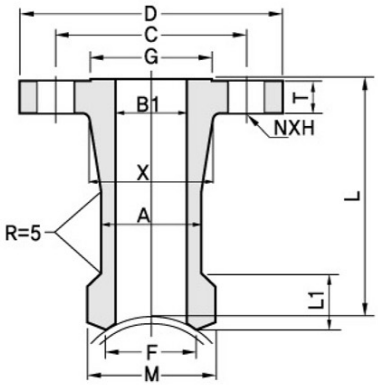

Class 150

Outlet Size	L1			M			F			L				
	S10-STD	S80	S160-XXS	S10-STD	S80	S160-XXS	S10-STD	S80	S160-XXS	150	300	600	1500	2500
1/2"	19.1	19.1	28.6	34.9	34.9	34.9	23.8	23.8	14.3	150	150	150	150	150
3/4"	22.2	22.2	31.8	44.5	44.5	44.5	30.2	30.2	19.1					
1"	27.0	27.0	38.1	54.0	54.0	50.8	36.5	36.5	25.4					
1-1/4"	31.8	31.8	44.5	65.1	65.1	61.9	44.5	44.5	33.3					
1-1/2"	33.3	33.3	50.8	73.0	73.0	69.9	50.8	50.8	38.1					
2"	38.1	38.1	55.6	88.9	88.9	81.0	65.1	65.1	42.9					165
2-1/2"	41.3	41.3	61.9	103.2	103.2	96.8	76.2	76.2	54.0					
3"	44.5	44.5	73.0	122.2	122.2	120.7	93.7	93.7	73.0	165	165			
4"	50.8	50.8	84.1	152.4	152.4	152.4	120.7	120.7	98.4					

Class 150	D	C	G	B1	X	NXH	A	T
1/2"	89.0	60.5	35.1	MATCH TO PIPE I.D	30.2	4X16	21.3	11.2
3/4"	98.0	70.0	42.9		38.1	4X16	26.7	12.7
1"	108.0	79.5	50.8		49.3	4X16	33.5	14.3
1-1/4"	117.0	89.0	63.5		58.7	4X16	42.2	15.9
1-1/2"	127.0	98.5	73.2		65.0	4X16	48.3	17.5
2"	152.0	120.5	91.9		77.8	4X19	60.5	19.1
2-1/2"	178.0	139.5	104.6		90.4	4X19	73.2	22.3
3"	190.0	152.5	127.0		108.0	4X19	88.9	23.9
4"	229.0	190.5	157.2		134.9	8X19	114.3	23.9

Class 300

Outlet Size	L1			M			F			L				
	S10-STD	S80	S160-XXS	S10-STD	S80	S160-XXS	S10-STD	S80	S160-XXS	150	300	600	1500	2500
1/2"	19.1	19.1	28.6	34.9	34.9	34.9	23.8	23.8	14.3	150	150	150	150	150
3/4"	22.2	22.2	31.8	44.5	44.5	44.5	30.2	30.2	19.1					
1"	27.0	27.0	38.1	54.0	54.0	50.8	36.5	36.5	25.4					
1-1/4"	31.8	31.8	44.5	65.1	65.1	61.9	44.5	44.5	33.3					
1-1/2"	33.3	33.3	50.8	73.0	73.0	69.9	50.8	50.8	38.1					
2"	38.1	38.1	55.6	88.9	88.9	81.0	65.1	65.1	42.9					165
2-1/2"	41.3	41.3	61.9	103.2	103.2	96.8	76.2	76.2	54.0					
3"	44.5	44.5	73.0	122.2	122.2	120.7	93.7	93.7	73.0	165	165			
4"	50.8	50.8	84.1	152.4	152.4	152.4	120.7	120.7	98.4					

Class 300	D	C	G	B1	X	NXH	A	T
1/2"	95.3	66.5	35.1	MATCH TO PIPE I.D	38.1	4X16	21.3	14.3
3/4"	117.0	82.6	42.9		47.6	4X19	26.7	15.9
1"	124.0	88.9	50.8		54.0	4X19	33.5	17.5
1-1/4"	133.0	98.6	63.5		63.5	4X19	42.2	19.1
1-1/2"	156.0	114.3	73.2		69.9	4X22	48.3	20.6
2"	165.0	127.0	91.9		84.1	8X19	60.5	22.4
2-1/2"	190.0	149.4	104.6		100.0	8X22	73.2	25.4
3"	210.0	168.1	127.0		117.5	8X22	88.9	28.6
4"	254.0	200.2	157.2		146.1	8X22	114.3	31.8

Branch Outlet Flange

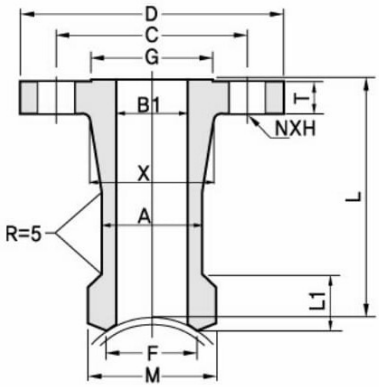

Class 600 / Class 1500

Outlet Size	L1			M			F			L				
	S10-STD	S80	S160-XXS	S10-STD	S80	S160-XXS	S10-STD	S80	S160-XXS	150	300	600	1500	2500
1/2"	19.1	19.1	28.6	34.9	34.9	34.9	23.8	23.8	14.3	150	150	150	150	150
3/4"	22.2	22.2	31.8	44.5	44.5	44.5	30.2	30.2	19.1					
1"	27.0	27.0	38.1	54.0	54.0	50.8	36.5	36.5	25.4					
1-1/4"	31.8	31.8	44.5	65.1	65.1	61.9	44.5	44.5	33.3					
1-1/2"	33.3	33.3	50.8	73.0	73.0	69.9	50.8	50.8	38.1					
2"	38.1	38.1	55.6	88.9	88.9	81.0	65.1	65.1	42.9					165

Class 600	D	C	G	B1	X	NXH	A	T
1/2"	95.0	66.5	34.9	MATCH TO PIPE I.D	38.1	4X16	21.3	14.3
3/4"	117.0	82.6	42.9		47.8	4X19	26.7	15.9
1"	124.0	88.9	50.8		53.8	4X19	33.5	17.5
1-1/4"	133.0	98.6	63.5		63.5	4X19	42.2	20.7
1-1/2"	155.0	114.3	73.0		69.9	4X22	48.3	22.3
2"	165.0	127.0	92.1		84.1	8X19	60.5	25.4

Class 1500	D	C	G	B1	X	NXH	A	T
1/2"	121.0	82.6	34.9	MATCH TO PIPE I.D	38.1	4X23	21.3	22.4
3/4"	130.0	88.9	42.9		44.5	4X23	26.7	25.4
1"	149.0	101.6	50.8		52.3	4X26	33.5	28.6
1-1/4"	159.0	111.3	63.5		63.5	4X26	42.2	28.6
1-1/2"	178.0	124.0	73.0		69.9	4X29	48.3	31.8
2"	216.0	165.1	92.1		104.6	8X26	60.5	38.1

Class 2500

Outlet Size	L1			M			F			L				
	S10-STD	S80	S160-XXS	S10-STD	S80	S160-XXS	S10-STD	S80	S160-XXS	150	300	600	1500	2500
1/2"	19.1	19.1	28.6	34.9	34.9	34.9	23.8	23.8	14.3	150	150	150	150	150
3/4"	22.2	22.2	31.8	44.5	44.5	44.5	30.2	30.2	19.1					
1"	27.0	27.0	38.1	54.0	54.0	50.8	36.5	36.5	25.4					
1-1/4"	31.8	31.8	44.5	65.1	65.1	61.9	44.5	44.5	33.3					
1-1/2"	33.3	33.3	50.8	73.0	73.0	69.9	50.8	50.8	38.1					
2"	38.1	38.1	55.6	88.9	88.9	81.0	65.1	65.1	42.9					165

Class 2500	D	C	G	B1	X	NXH	A	T
1/2"	133.0	88.9	34.9	MATCH TO PIPE I.D	42.9	4X23	21.3	30.2
3/4"	140.0	95.3	42.9		50.8	4X23	26.7	31.8
1"	159.0	108.0	50.8		57.2	4X26	33.5	35.1
1-1/4"	184.0	130.0	63.5		73.2	4X29	42.2	38.1
1-1/2"	203.0	146.1	73.0		79.2	4X32	48.3	44.5
2"	235.0	171.5	92.1		95.3	8X29	60.5	50.8

For Forged Socket Welding Fittings

Unit : kgs

Nominal Size	90°Elbow		45°Elbow		Tee		Cross	
	3000	6000	3000	6000	3000	6000	3000	6000
1/4	0.16	0.18	0.15	0.16	0.18	0.18	0.18	0.23
3/8	0.15	0.18	0.16	0.16	0.18	0.18	0.17	0.40
1/2	0.26	0.455	0.23	0.37	0.315	0.62	0.36	0.66
3/4	0.325	0.73	0.285	0.59	0.41	0.935	0.51	1.12
1	0.51	1.185	0.435	1.055	0.63	1.58	0.78	1.925
1 1/4	0.765	1.91	0.63	1.85	1.00	2.50	1.02	2.38
1 1/2	1.105	2.84	0.90	3.285	1.34	3.75	1.38	3.75
2	1.80	3.30	1.45	2.26	2.00	3.68	2.605	7.86
2 1/2	3.52	8.60	2.45		3.00		7.48	
3	4.90	10.30	3.86		5.70		10.43	
4	16.30		11.20		16.30		18.14	

Unit : kgs

Nominal Size	Coupling		H / Coupling		Cap		Boss		Union	
	3000	6000	3000	6000	3000	6000	3000	6000	3000	6000
1/4	0.05	0.05	0.02	0.03	0.035	0.04	0.02	0.03	0.23	0.25
3/8	0.06	0.09	0.085	0.06	0.055	0.08	0.03	0.06	0.285	0.41
1/2	0.105	0.15	0.14	0.21	0.08	0.13	0.125	0.10	0.375	0.70
3/4	0.17	0.25	0.205	0.315	0.15	0.29	0.185	0.25	0.57	1.00
1	0.25	0.385	0.30	0.47	0.27	0.47	0.38	0.38	0.82	1.35
1 1/4	0.34	0.46	0.43	0.68	0.375	0.61	0.40	0.525	1.15	1.90
1 1/2	0.465	0.705	0.605	1.54	0.755	0.94	0.52	0.74	1.58	3.80
2	0.71	1.10	0.92	2.16	1.41	1.90	0.83	1.18	2.50	6.40
2 1/2	1.09	1.80	1.70	2.40	1.775	2.71			4.25	6.87
3	1.33	2.35	1.83	3.10	2.185	4.10			7.12	10.85
4	2.90	4.05	2.70	4.10	4.40	6.25			12.40	

Unit : kgs

Nominal Size	Weldolets				Sockolets		Thredolets	
	S.T.D	XS	SCH160	XXS	3000	6000	3000	6000
1/2	0.08	0.09	0.14	0.145	0.12	0.23	0.13	0.27
3/4	0.16	0.16	0.25	0.26	0.15	0.36	0.20	0.39
1	0.23	0.26	0.38	0.42	0.36	0.65	0.38	0.64
1 1/4	0.36	0.41	0.57	0.57	0.50	0.73	0.47	0.71
1 1/2	0.59	0.605	0.89	0.90	0.63	1.14	0.45	0.89
2	0.87	0.91	1.24	1.23	0.865	2.33	0.95	2.30
2 1/2	1.14	1.20	1.54	1.54	1.25		1.36	
3	1.575	1.78	2.90	3.43	1.73		1.98	
4	2.78	3.19	4.80	4.80	3.30		3.22	
5	4.66	4.70	6.50	6.50				
6	6.45	10.50	12.70	12.70				
8	10.68	16.80	20.50	20.50				
10	17.73	20.90	38.60	38.60				

For Forged Threaded Fittings

Unit : kgs

Nominal Size	90°Elbow		45°Elbow		Tee		Cross	
	2000	3000	2000	3000	2000	3000	2000	3000
1/4	0.18	0.15	0.12	0.12	0.18	0.21	0.23	0.17
3/8	0.18	0.315	0.12	0.26	0.18	0.20	0.23	0.45
1/2	0.27	0.45	0.12	0.38	0.35	0.56	0.40	0.68
3/4	0.35	0.68	0.35	0.575	0.50	0.895	0.51	1.09
1	0.53	1.095	0.52	0.995	0.70	1.45	0.77	1.61
1 1/4	1.35	1.90	0.705	1.40	1.16	1.83	1.13	1.87
1 1/2	1.90	2.63	1.40	2.215	1.39	3.27	1.45	2.95
2	2.63	2.83	1.98	2.90	3.05	3.50	2.38	3.69
2 1/2	2.85	5.84	2.90	3.80	4.25	6.20	7.46	7.60
3	5.40	7.80	3.80	5.45	5.55	11.76	8.85	8.96
4	15.26	16.25	6.90	8.68	16.18	17.55	14.50	14.80

Unit : kgs

Nominal Size	Coupling		H / Coupling		Cap		Boss	
	3000	6000	3000	6000	3000	6000	3000	6000
1/4	0.06	0.06	0.02	0.03	0.05	0.09	0.05	0.06
3/8	0.07	0.16	0.03	0.08	0.05	0.155	0.06	0.08
1/2	0.17	0.32	0.08	0.11	0.135	0.25	0.19	0.20
3/4	0.23	0.45	0.16	0.25	0.215	0.40	0.245	0.40
1	0.41	0.58	0.21	0.30	0.37	0.72	0.305	0.695
1 1/4	0.86	1.05	0.37	0.44	0.61	0.90	0.58	0.66
1 1/2	1.10	1.20	0.49	0.60	0.83	1.315	0.58	1.09
2	1.28	2.05	0.65	1.05	1.18	2.09	0.62	1.60
2 1/2	2.10	3.20	1.05	1.60	1.85	3.10		
3	3.05	5.80	1.55	2.90	2.955	4.90		
4	5.65	8.90	2.90	4.50	4.30	6.25		

Unit : kgs

Nominal Size	Union		Nipple	S / H Plug	H / H Plug	R / H Plug	H / H Bushing	Flush Bushing
	3000	6000						
1/4	0.14	0.45	0.04	0.02	0.03	0.05	0.03	0.03
3/8	0.245	0.60	0.05	0.03	0.06	0.05	0.03	0.03
1/2	0.35	1.025	0.09	0.06	0.09	0.115	0.03	0.03
3/4	0.57	1.42	0.15	0.09	0.12	0.195	0.05	0.06
1	0.795	1.85	0.27	0.14	0.21	0.34	0.09	0.06
1 1/4	1.12	3.00	0.45	0.28	0.51	0.34	0.17	0.06
1 1/2	1.565	3.73	0.62	0.37	0.575	0.69	0.31	0.09
2	2.01	5.50	1.03	0.625	0.94	1.36	0.74	0.17
2 1/2	5.14	6.87	1.51	1.02	1.76	2.15	1.08	0.29
3	7.12	10.85	2.22	1.615	2.40	3.45	1.59	0.45
4	12.40			3.26	5.90	5.83	3.77	0.91

DONGLIM PIPING
FORGED PRODUCTS & FITTINGS

142, Sanmakgongdanbuk 11-gil, Yangsan-si,
Gyeongsangnam-do, Korea

TEL +82-55-375-7488
FAX +82-55-375-7493
sales@dlpp.co.kr

Design by Power Graphic / T.(051)867-8560

Revision No. : 1